CONSTRUCTION PLANS
FOR
CAMINO DEL LLANO PONDS

CITY OF BELEN
VALENCIA COUNTY, NEW MEXICO
CONSTRUCTION PLANS

VICINITY MAP
REFERENCE GOOGLE EARTH

CERTIFICATE OF SUBSTANTIAL COMPLIANCE OF PLANS

I, Christopher A. Perea of the firm Wilson & Company, a Registered Professional Engineer in the State of New Mexico, do hereby certify, to the best of my knowledge and belief, that the infrastructure installed as part of this project has been inspected by me or by a qualified person under my direct supervision and has been constructed in accordance with the plans and specifications. The original design intent of the approved plans has been met, except as noted by me on the as-built construction drawings. This Certification is based on site inspections by me or personnel under by direction and survey information provided by Wilson & Company, Inc., Engineers & Architects.

Christopher A. Perea, P.E. NM 13686 — 9/6/2016 Date

RECORD DRAWING
DATE 9/06/16

WILSON & COMPANY
4900 LANG AVE. NE
ALBUQUERQUE, NM 87109
PHONE: 505-348-4000
FAX: 505-348-4055 FIRST FLOOR
FAX: 505-348-4155 SECOND FLOOR
www.wilsonco.com

SEAL

PROJECT NAME: CITY OF BELEN CAMINO DEL LLANO PONDS

REV.	DATE	DESCRIPTION	BY

PROJECT NO:	1160002300
DESIGNED BY:	JEL
DRAWN BY:	JEM
CHECKED BY:	CAP
DATE:	JAN 2015

SHEET TITLE: COVER SHEET

SHEET NO: 1-1

M:\FS\11-600-023-00\CADD\SHEETS\01 GEN\1160023_COVER.DWG 9/8/2016 7:22 AM

INDEX OF SHEETS

CITY OF BELEN CONTACTS

	PHONE	MOBILE	CONTACT
CITY HALL	966-2730	–	–
CITY MANAGER	966-2732	–	JAY RUYBALID
CITY ENGINEER, PE	966-2750	288-0586	JOHN BEST
PUBLIC WORKS DIRECTOR	966-2735	–	DALE TAFOYA

UTILITY OWNERS

CONTACT	PHONE AND EMAIL	UTILITY/ADDRESS
GERALD ORTIZ	OFFICE PHONE: (505) 765-7111 OFFICE FAX: EMAIL: GERALD.ORTIZ@CENTURYLINK.COM	CENTURY LINK 19374 HIGHWAY 314 BELEN, NM 87002-6377
MIKE MORTUS	OFFICE PHONE: (505)761-6252 OFFICE FAX: EMAIL: MIKE_MORTUS@CABLE.COMCAST.COM	COMCAST
RALPH JARAMILLO	OFFICE PHONE: (505) 966-2730 CELL PHONE: (505) 307-9121 OFFICE FAX: EMAIL: RALPH.JARAMILLO@BELEN-NM.GOV	WATER / SEWER 100 S. MAIN ST BELEN, NM 87002
ART CHAVEZ	OFFICE PHONE: (505) 241-4038 OFFICE FAX: EMAIL: ACHAVEZ1@PNM.COM	PNM ELECTRIC CO.
CLARA BUSTAMANTE	OFFICE PHONE: (505) 697-4212 OFFICE FAX: EMAIL: JEFF.ESTVANKO@NMGCO.COM	NEW MEXICO GAS CO. 19374 HIGHWAY 314 BELEN, NM 87002

SHEET NUMBER	DESCRIPTION
1-1	COVER SHEET
1-2	INDEX OF SHEETS
1-3	GENERAL NOTES
	SUBTOTAL 3 SHEETS
2-1	SURVEY CONTROL AND LEGEND
2-2	DEMOLITION PLAN
2-3	SWPP PLAN
2-4	NORTH POND GRADING & DRAINAGE
2-5	SOUTH POND GRADING & DRAINAGE
2-6	PRINCIPAL SPILLWAY STRUCTURE DETAILS
2-7	MISCELLANEOUS DETAILS
	SUBTOTAL 7 SHEETS
3-1	NORTH POND RETAINING WALL PLAN & PROFILE
3-2	SOUTH POND RETAINING WALL PLAN & PROFILE
3-3	POND EQUALIZER PIPES PLAN & PROFILE
3-4	CAMINO DEL LLANO ROADWAY PLAN & PROFILE
	SUBTOTAL 4 SHEETS
7-1	SIGNING AND CONSTRUCTION TRAFFIC CONROL STANDARDS
7-2	TEMPORARY TRAFFIC CONTROL PLANS
7-3	TRAFFIC CONTROL PLAN AND SIGNING EXAMPLES
	SUBTOTAL 3 SHEETS
12-1	NMDOT STANDARD DETAILS
12-2	NMDOT STANDARD DETAILS
12-3	NMDOT STANDARD DETAILS
12-4	NMDOT STANDARD DETAILS
12-5	NMDOT STANDARD DETAILS
12-6	NMDOT STANDARD DETAILS
12-7	NMDOT STANDARD DETAILS
12-8	NMDOT STANDARD DETAILS
12-9	NMDOT STANDARD DETAILS
12-10	NMDOT STANDARD DETAILS
12-11	NMDOT STANDARD DETAILS
12-12	NMDOT STANDARD DETAILS
12-13	NMDOT STANDARD DETAILS
12-14	NMDOT STANDARD DETAILS
12-15	NMDOT STANDARD DETAILS
12-16	NMDOT STANDARD DETAILS
12-17	NMDOT STANDARD DETAILS
	SUBTOTAL 17 SHEETS
	TOTAL 34 SHEETS

RECORD DRAWING
DATE 9/06/2016

WILSON & COMPANY
4900 LANG AVE. NE
ALBUQUERQUE, NM 87109
PHONE: 505-348-4000
FAX: 505-348-4055 FIRST FLOOR
FAX: 505-348-4155 SECOND FLOOR
www.wilsonco.com

SEAL

PROJECT NAME
CITY OF BELEN
CAMINO DEL LLANO PONDS

REV.	DATE	DESCRIPTION	BY

PROJECT NO:	1160002300
DESIGNED BY:	JEL
DRAWN BY:	JEM
CHECKED BY:	CAP
DATE:	JAN 2015

SHEET TITLE
INDEX OF SHEETS & CONTACT INFORMATION

SHEET NO:
1-2

M:\IFS\11-600-023-00\CADD\SHEETS\01 GEN\116023_INDEX.DWG 11/12/2014 3:57 PM

GENERAL NOTES:

1. ALL IMPROVEMENTS, UNLESS OTHERWISE MODIFIED IN THE PROJECT SPECIFICATIONS, SHALL BE CONSTRUCTED IN ACCORDANCE WITH THE NMDOT STANDARD SPECIFICATIONS, 2014 EDITION, EXCEPT WHERE OTHERWISE NOTED IN THE DRAWINGS. MEASUREMENT AND PAYMENT SHALL BE IN ACCORDANCE WITH THE BID FORM AND THE NMDOT STANDARD SPECIFICATIONS.

2. STANDARD DRAWINGS: REFER TO STANDARD DRAWINGS FOR NMDOT STANDARD SPECIFICATIONS, 2014 EDITION UNLESS OTHERWISE NOTED.

3. THE CONTRACTOR AGREES THAT HE/SHE SHALL ASSUME THE SOLE AND COMPLETE RESPONSIBILITY FOR THE JOB SITE CONDITIONS DURING THE COURSE OF PROJECT CONSTRUCTION, INCLUDING SAFETY OF ALL PERSONS AND PROPERTY, THAT THIS REQUIREMENT SHALL APPLY CONTINUOUSLY AND NOT BE LIMITED TO NORMAL WORKING HOURS, AND THE CONTRACTOR SHALL DEFEND, INDEMNIFY AND HOLD THE OWNER AND ENGINEER HARMLESS FROM ANY AND ALL LIABILITY, REAL OR ALLEGED, IN CONNECTION WITH THE PERFORMANCE OF WORK ON THIS PROJECT, EXCEPTING FOR LIABILITY ARISING FROM THE SOLE NEGLIGENCE OF THE OWNER OR ENGINEER.

4. NO CHANGES SHALL BE MADE TO THESE PLANS WITHOUT THE WRITTEN APPROVAL OF THE OWNER, ENGINEER AND ALL APPROVAL SIGNATORIES. THE ENGINEER SHALL NOT BE RESPONSIBLE FOR CONSTRUCTION METHODS OR TECHNIQUES OR FOR THE PROSECUTION OF THE WORK AS SHOWN ON THESE PLANS. THE ENGINEER SHALL NOT BE RESPONSIBLE FOR THE ACTS OR OMISSIONS OF THE CONTRACTOR, SUBCONTRACTORS OR OTHER PERSONS PERFORMING ANY OF THE WORK OR FOR THE FAILURE OF ANY OF THEM TO CARRY OUT THE WORK IN ACCORDANCE WITH CONTRACT DOCUMENTS.

5. UNLESS OTHERWISE PROVIDED AS PART OF THE CONSTRUCTION PLANS, A COMPLETE TRAFFIC CONTROL PLAN SHALL BE PREPARED BY THE CONTRACTOR WHEN ANY PORTION OF THE WORK IS IN THE PUBLIC RIGHT-OF-WAY OR AFFECTING ON-SITE VEHICLE OR PEDESTRIAN CIRCULATION. ALL CONSTRUCTION SIGNING, BARRICADING AND CHANNELIZATION SHALL CONFORM TO THE MANUAL ON UNIFORM TRAFFIC CONTROL DEVICES (MUTCD) LATEST EDITION. THE PLAN SHALL BE SUBMITTED TO THE ENGINEER FOR APPROVAL FOR ON-SITE CONSTRUCTION. TRAFFIC CONTROL WITHIN THE NMDOT RIGHT-OF-WAY SHALL DEFAULT TO THE NMDOT TRAFFIC DEPARTMENT FOR APPROVAL. THE CONTRACTOR SHALL NOT IMPLEMENT THE TRAFFIC CONTROL PLAN UNTIL APPROVAL OF THE PLAN HAS BEEN RECEIVED FROM THE APPROPRIATE AUTHORITY. THE TRAFFIC CONTROL PLAN SHALL BE SUBMITTED TO AND APPROVED BY THE CITY OF BELEN/VALENCIA COUNTY OR ENGINEER.

6. THE CONTRACTOR SHALL DESIGNATE AT LEAST ONE EMERGENCY CONTACT PERSON, AND SHALL PROVIDE TELEPHONE NUMBERS WHERE THIS PERSON CAN BE CONTACTED AT ANY TIME, INCLUDING WEEKENDS, HOLIDAYS AND AFTER HOURS. THIS INFORMATION SHALL BE PROVIDED TO THE OWNER AND THE ENGINEER.

7. THE CONTRACTOR IS RESPONSIBLE FOR OBTAINING ALL REQUIRED CONSTRUCTION PERMITS FROM ALL JURISDICTIONAL AUTHORITIES PRIOR TO START OF CONSTRUCTION. PERMIT COSTS ARE INCIDENTAL TO MOBILIZATION BID ITEM.

8. ALL WORK ON THIS PROJECT SHALL BE PERFORMED IN ACCORDANCE WITH APPLICABLE FEDERAL, STATE AND LOCAL LAWS, RULES AND REGULATIONS CONCERNING CONSTRUCTION SAFETY, HEALTH, AND ENVIRONMENTAL PROTECTION.

9. EXISTING SITE IMPROVEMENTS WHICH ARE DAMAGED OR DISPLACED BY THE CONTRACTOR SHALL BE REMOVED AND REPLACED BY THE CONTRACTOR AT THE CONTRACTOR'S OWN EXPENSE. REPAIRS SHALL BE APPROVED BY THE OWNER PRIOR TO CONSTRUCTION OF THE REPAIRS. REPAIRS SHALL BE ACCEPTED BY THE OWNER PRIOR TO FINAL PAYMENT.

10. THE CONTRACTOR SHALL USE THE DESIGNATED STAGING AREAS FOR STORAGE OF EQUIPMENT AND MATERIAL. NO MATERIAL OR EQUIPMENT MAY BE STORED OR LEFT ON-SITE AT ANY OTHER LOCATION. THE OWNER ASSUMES NO LIABILITY FOR CONTRACTOR'S EQUIPMENT AND MATERIAL IN THE STAGING AREA. SECURITY SHALL BE THE RESPONSIBILITY OF THE CONTRACTOR. IF NO STAGING AREA IS DESIGNATED ON THESE PLANS, AN OFF-SITE STAGING AREA SHALL BE PROVIDED AT THE CONTRACTOR'S EXPENSE, OR THE CONTRACTOR MAY NEGOTIATE WITH THE OWNER TO USE AN ON-SITE AREA.

11. ALL STATIONING REFERS TO THE CENTERLINE OF THE RIGHT-OF-WAY UNLESS OTHERWISE NOTED. STATIONING OF CHANNELS OR PIPES IN DRAINAGE EASEMENTS REFERS TO THE CENTERLINE OF CHANNEL OR PIPE, UNLESS OTHERWISE NOTED.

12. THE CONTRACTOR SHALL BE RESPONSIBLE FOR DETERMINING, IN ADVANCE OF HIS/HER CONSTRUCTION OPERATIONS, IF OVERHEAD UTILITY LINES, SUPPORT STRUCTURES, POLES, GUYS, ETC. ARE AN OBSTRUCTION TO CONSTRUCTION OPERATIONS. IF ANY OBSTRUCTION IS EVIDENT, THE CONTRACTOR SHALL BE RESPONSIBLE FOR COORDINATING WITH THE APPROPRIATE UTILITY OWNER TO REMOVE OR SUPPORT THE UTILITY OBSTRUCTION. ANY COST ASSOCIATED WITH THIS EFFORT SHALL BE THE RESPONSIBILITY OF THE CONTRACTOR.

13. NON-DESTRUCTIVE UTILITY EXPLORATION-TYPICAL TASKS BY THE CONTRACTOR LEADING TO UTILITY EXPLORATION ARE:

A) SELECT AN APPROPRIATE METHOD OF GATHERING DATA THAT WILL ACHIEVE THE ACCURACIES AND PRECISION REQUIRED TO IDENTIFY THE EXACT X, Y AND Z LOCATION OF CONFLICT. VERTICAL AND HORIZONTAL SURVEY MAPPING ACCURACY SHALL ADHERE TO THE DESIGN SURVEY CONTROL.

B) WHEN EXCAVATING TEST HOLES EXPOSING THE UTILITY TO BE MEASURED, IT SHALL BE EXECUTED IN SUCH A MANNER THAT IT PROTECTS THE INTEGRITY OF THE UTILITY TO BE MEASURED. EXPOSURE IS TYPICALLY PERFORMED VIA MINIMALLY INTRUSIVE EXCAVATION.

C) NON-DESTRUCTIVE UTILITY EXPLORATION SHALL BE DONE A MINIMUM OF ONE WEEK IN ADVANCE OF PROJECT SCHEDULE DELAY. THIS WORK SHALL BE PAID UNDER BID ITEM 30.

D) COMPLY WITH APPLICABLE UTILITY DAMAGE PREVENTION LAWS, PERMITS, AND SPECIFICATIONS, AND COORDINATE WITH UTILITY AND OTHER INSPECTORS, AS REQUIRED.

E) DETERMINE (a) THE HORIZONTAL AND VERTICAL LOCATION OF THE TOP AND/OR BOTTOM OF THE UTILITY REFERENCED TO THE PROJECT SURVEY DATUM; (b) THE ELEVATION OF THE EXISTING GRADE OVER THE UTILITY AT A TEST HOLE REFERENCED TO THE PROJECT SURVEY DATUM; (c) THE OUTSIDE DIAMETER OF THE UTILITY AND CONFIGURATION OF NON-ENCASED, MULTI-CONDUIT SYSTEMS; (d) THE UTILITY STRUCTURE MATERIAL COMPOSITION, WHEN REASONABLY ASCERTAINABLE; (e) THE BENCHMARKS AND /OR PROJECT SURVEY DATA USED TO DETERMINE ELEVATIONS; (f) THE PAVING THICKNESS AND TYPE, WHERE APPLICABLE; (g) THE GENERAL SOIL TYPE AND SITE CONDITIONS; AND (h) SUCH OTHER PERTINENT INFORMATION AS IS REASONABLY ASCERTAINABLE FROM EACH TEST HOLE SITE.

F) UTILITY EXPLORATION SHALL BE PAID UNDER BID ITEM 30.

14. UTILITY ALLOWANCE CONTRACTOR SHALL INCLUDE A UTILITY ALLOWANCE OF $25,000.00. UTILITY ALLOWANCE IS INTENDED TO COVER WORK, WHICH IS NOT KNOWN DUE TO COVERED AND UNFORESEEN UNDERGROUND UTILITY CONFLICTS. CONTRACTOR SHALL BE REQUIRED TO PROVIDE A DETAILED SCOPE OF WORK AND COST FOR REVIEW BY OWNERS REPRESENTATIVE PRIOR TO PROCEEDING. PROVISIONS OF ALLOWANCE DOES NOT GUARANTEE FULL AMOUNT TO CONTRACTOR. ONLY THAT PORTION OF MONEY USED FOR INTENDED PURPOSES WILL BE EXPENDED. 1

15. AS-BUILTS: CONTRACTOR SHALL RETAIN A QUALIFIED NM SURVEYOR TO PERFORM A POST CONSTRUCTION TOPOGRAPHIC SURVEY. DELIVER FINAL CERTIFIED AS-BUILTS IN HARD COPY AND ACAD R2010 OR BETTER. AS-BUILTS SHALL BE SUBMITTED WITH SUBSTANTIAL COMPLETION PAY APPLICATION. NO PAYMENT WILL BE MADE WITHOUT AS-BUILT SUBMITTAL.

SCHEDULE: THE CONTRACTOR SHALL PREPARE AND SUBMIT A SCHEDULE PRIOR TO COMMENCEMENT OF PROJECT CONSTRUCTION. THE SCHEDULE SHALL CLEARLY IDENTIFY A WORK BREAKDOWN STRUCTURE THAT DETERMINES THE TOTAL PROJECT DURATION.

17. WHEN ABUTTING NEW PAVEMENT TO EXISTING INTERSECTING STREETS THE EXISTING PAVEMENT SHALL BE SAW CUT TO A STRAIGHT LINE AT RIGHT ANGLES AND ANY BROKEN OR CRACKED PAVEMENT SHALL BE REMOVED. SAW CUTTING SHALL BE INCIDENTAL TO PAVING, THEREFORE, NO DIRECT PAYMENT WILL BE MADE FOR THE SAW CUTTING.

18. WATER DIVERSION DURING CONSTRUCTION IS THE RESPONSIBILITY OF THE CONTRACTOR AND SHALL BE PAID FOR UNDER BID ITEM 29. THE PROTECTION SYSTEM SHALL BE DESIGNED TO ALLEVIATE 25 YEAR STORM EVENTS. EXCEPT FOR OWNER DESIGNED PROTECTION SYSTEMS, THE CONTRACTOR SHALL BE RESPONSIBLE FOR THE COMPLETE DETAILED DESIGN OF THE PROTECTION SYSTEM REQUIRED TO CARRY OUT THE WORK SHOWN IN THE CONTRACT DOCUMENTS. PROTECTION SYSTEMS MUST BE SIGNED AND SEALED BY A LICENSED NEW MEXICO ENGINEER IN GOOD STANDING. 1

19. CONTRACTOR MUST INSTALL 2 – 4' DIA MH w/BEEHIVE INLETS. SEE SHEET CSD-110 OF THE CAMINO DEL LLANO IMPROVEMENTS CONSTRUCTION PLANS BY MOLZEN CORBIN. INLETS SHALL BE SUPPLIED BY CITY OF BELEN. IT WILL BE THE RESPONIBILITY OF THE CONTRACTOR TO HAUL INLETS TO PROJECT SITE.

20. CONTRACTOR MUST REMOVE ASPHALT FROM INLET AND CLEAN. REMOVE WOOD AND DEBRIS, VIDEO TAPE INLETS AND PIPES, AND INSTALL INLET GRATES ON SHEETS CSD-110 THRU CSD-113 OF THE CAMINO DEL LLANO IMPROVEMENTS CONSTRUCTION PLANS BY MOLZEN CORBIN. INLETS GRATES SHALL BE SUPPLIED BY THE CITY OF BELEN. IT WILL BE THE RESPONIBILITY OF THE CONTRACTOR TO HAUL INLETS TO PROJECT SITE.

21. THE 34"x53" ELLIPTICAL PIPE SUPPLIED BY THE CITY OF BELEN WILL BE THE RESPONSIBILITY OF THE CONTRACTOR TO HAUL PIPE TO PROJECT SITE.

EROSION CONTROL/ENVIRONMENTAL PROTECTION/STORM WATER POLLUTION PREVENTION PLAN:

1. THE CONTRACTOR SHALL CONFORM TO ALL CITY, COUNTY, STATE AND FEDERAL DUST AND EROSION CONTROL REGULATIONS. THE CONTRACTOR SHALL PREPARE AND OBTAIN ANY NECESSARY DUST OR EROSION CONTROL PERMITS FROM REGULATORY AGENCIES.

2. THE CONTRACTOR SHALL PROMPTLY REMOVE ANY MATERIAL EXCAVATED WITHIN THE PUBLIC RIGHT-OF-WAY TO KEEP IT FROM WASHING OFF THE PROJECT SITE.

3. THE CONTRACTOR SHALL ENSURE THAT NO SOIL ERODES FROM THE SITE ONTO OTHER PROPERTY BY CONSTRUCTING TEMPORARY EROSION CONTROL BERMS OR PLAN. INSTALLING SILT FENCES AT THE PROPERTY LINES.

4. THE CONTRACTOR SHALL MITIGATE EROSION OF TEMPORARY OR PERMANENT DIRT SWALES BY INSTALLING CHECK DAMS IN THE SWALES PERPENDICULAR TO THE DIRECTION OF FLOW.

5. THE CONTRACTOR SHALL WET THE SOIL AS NEEDED TO KEEP IT FROM BLOWING WATERING, AS REQUIRED FOR CONSTRUCTION AND DUST CONTROL, SHALL BE CONSIDERED INCIDENTAL TO CONSTRUCTION AND NO MEASUREMENT OR PAYMENT SHALL BE MADE THEREFOR. CONSTRUCTION AREAS SHALL BE WATERED FOR DUST CONTROL IN COMPLIANCE WITH GOVERNMENT ORDINANCES. THE CONTRACTOR SHALL BE RESPONSIBLE FOR LOCATING AND SUPPLYING WATER AS REQUIRED.

6. ANY AREAS DISTURBED BY CONSTRUCTION AND NOT COVERED BY LANDSCAPING OR ANY IMPERVIOUS SURFACE SHALL BE REVEGETATED WITH NATIVE GRASS SEEDING. WHEN CONSTRUCTION ACTIVITIES CEASE AND EARTH DISTURBING ACTIVITIES WILL NOT RESUME WITHIN 14 DAYS, STABILIZATION MEASURES MUST BE INITIATED. UNLESS INDICATED OTHERWISE ON THESE PLANS OR ON THE LANDSCAPING PLAN, SEEDING SHALL BE NATIVE GRASS SEEDING PER SECTION 1012 OF THE APWA STANDARD SPECIFICATIONS FOR PUBLIC WORKS CONSTRUCTION.

7. ALL WASTE PRODUCTS FROM THE CONSTRUCTION SITE, INCLUDING ITEMS DESIGNATED FOR REMOVAL, CONSTRUCTION WASTE, CONSTRUCTION EQUIPMENT WASTE PRODUCTS (OIL, GAS, TIRES, ETC.) GARBAGE, GRUBBING, EXCESS CUT MATERIAL, VEGETATIVE DEBRIS, ETC. SHALL BE APPROPRIATELY DISPOSED OF OFF-SITE AT NO ADDITIONAL COST TO THE OWNER. IT SHALL BE THE CONTRACTOR'S RESPONSIBILITY TO OBTAIN PERMITS REQUIRED FOR HAUL OR DISPOSAL OF WASTE PRODUCTS. IT SHALL BE THE CONTRACTOR'S RESPONSIBILITY TO ENSURE THAT THE WASTE DISPOSAL SITE COMPLIES WITH GOVERNMENT REGULATIONS REGARDING THE ENVIRONMENT, ENDANGERED SPECIES AND ARCHAEOLOGICAL RESOURCES.

8. THE CONTRACTOR SHALL BE RESPONSIBLE FOR THE CLEANUP AND REPORTING OF SPILLS OF HAZARDOUS MATERIALS ASSOCIATED WITH THE CONSTRUCTION SITE. HAZARDOUS MATERIALS INCLUDE GASOLINE, DIESEL FUEL, MOTOR OIL, SOLVENTS, CHEMICALS, PAINTS, ETC. WHICH MAY BE A THREAT TO THE ENVIRONMENT. THE CONTRACTOR SHALL REPORT THE DISCOVERY OF PAST OR PRESENT SPILLS TO THE NEW MEXICO ENVIRONMENT DEPARTMENT EMERGENCY RESPONSE AT 1-(505)-827-9329.

9. THE CONTRACTOR SHALL COMPLY WITH ALL APPLICABLE REGULATIONS CONCERNING SURFACE AND UNDERGROUND WATER. CONTACT WITH SURFACE WATER BY CONSTRUCTION EQUIPMENT AND PERSONNEL SHALL BE MINIMIZED. EQUIPMENT MAINTENANCE AND REFUELING OPERATIONS SHALL BE PERFORMED IN AN ENVIRONMENTALLY SAFE MANNER IN COMPLIANCE WITH GOVERNMENT REGULATIONS.

10. THE CONTRACTOR SHALL COMPLY WITH ALL APPLICABLE REGULATIONS CONCERNING CONSTRUCTION NOISE AND HOURS OF OPERATION.

11. WHERE STORM INLETS ARE SUSCEPTIBLE TO IN FLOW OF SILT OR DEBRIS FROM CONSTRUCTION ACTIVITIES, PROTECTION SHALL BE INSTALLED ON THEIR UPSTREAM SIDE.

12. THE CONTRACTOR SHALL PREPARE AND MAINTAIN A COPY OF THE STORM WATER POLLUTION PREVENTION PLAN (SWPPP) ON-SITE AT ALL TIMES, AND SHALL COMPLY WITH THE REQUIREMENTS INDICATED ON THAT PLAN.

ROADS:

1. ALL UNDERGROUND UTILITIES SHALL BE INSTALLED PRIOR TO SURFACING OF THE STREETS. ALL WATER VALVE BOXES AND ELECTRICAL, TELEPHONE, TELEVISION AND SEWER MANHOLES IN THE CONSTRUCTION AREA SHALL BE ADJUSTED TO FINISH GRADE.

2. ALL PERMANENT SIGNS, BARRICADES, CHANNELIZATION DEVICES, PAVEMENT MARKINGS, SIGN FRAMES AND ERECTION OF SUCH DEVICES SHALL CONFORM TO THE REQUIREMENTS OF THE "MANUAL ON UNIFORM TRAFFIC CONTROL DEVICES FOR STREETS AND HIGHWAYS" LATEST EDITION.

3. ALL STREET STRIPING ALTERED OR DESTROYED DURING CONSTRUCTION SHALL BE REPLACED BY THE CONTRACTOR TO MATCH THE ORIGINAL CONDITIONS (I.E. TYPE, SPACING) AT THE LOCATION PRIOR TO CONSTRUCTION, OR AS SHOWN IN THIS PLAN SET.

4. STREET GRADES SHALL BE RESTORED BY THE CONTRACTOR TO THE EXISTING GRADES UNLESS OTHERWISE DIRECTED BY THE ENGINEER. SMOOTH TRANSITIONS SHALL BE MADE BETWEEN EXISTING PAVEMENT WHICH REMAINS IN PLACE AND PAVEMENT WHICH IS REPLACED. WHEN ABUTTING NEW PAVEMENT TO EXISTING, SAWCUT BACK EXISTING PAVEMENT TO A NEAT, STRAIGHT LINE AS REQUIRED TO REMOVE ANY BROKEN OR CRACKED PAVEMENT.

UTILITIES-GENERAL NOTE:

1. IF ANY UTILITY LINES, PIPELINES OR UNDERGROUND UTILITY LINES ARE SHOWN ON THESE DRAWINGS. THEY ARE SHOWN IN AN APPROXIMATE LOCATION ONLY, AND LINES MAY EXIST WHERE NONE ARE SHOWN. THE LOCATION IS BASED UPON INFORMATION PROVIDED BY THE UTILITY OWNER OR FROM EXISTING PLANS, AND THIS INFORMATION MAY BE INCOMPLETE, OR OBSOLETE AT THE TIME OF CONSTRUCTION. THE ENGINEER HAS NOT UNDERTAKEN ANY FIELD VERIFICATION OF THESE LOCATIONS, LINE SIZES OR MATERIAL TYPE, MAKES NO REPRESENTATION THERETO, AND ASSUMES NO RESPONSIBILITY ITSELF OF THE LOCATION OF ANY UTILITY LINE, PIPELINE OR UNDERGROUND INSTALLATION IN OR NEAR THE AREA IN ADVANCE OF ANY DURING ANY EXCAVATION WORK. THE CONTRACTOR IS FULLY RESPONSIBLE FOR ANY AND ALL DAMAGES CAUSED BY ITS FAILURE TO LOCATE, IDENTIFY AND PRESERVE ANY AND ALL EXISTING UTILITIES, PIPELINES AND UNDERGROUND FACILITIES. IN PLANNING AND CONDUCTING EXCAVATIONS. THE CONTRACTOR SHALL COMPLY WITH ALL STATE STATUES, MUNICIPAL AND LOCAL ORDINANCES, RULES AND REGULATIONS, IF ANY, PERTAINING TO THE LOCATION OF THESE LINES AND FACILITIES.

2. THE CONTRACTOR SHALL NOTIFY NEW MEXICO ONE CALL, INC. AT 260-1990 AT LEAST TWO WORKING DAYS PRIOR TO STARTING WORK ON THIS PROJECT. CONTRACTOR IS ALSO RESPONSIBLE FOR UTILITY LOCATING ON THE SCHOOL PROPERTY. COST IS INCIDENTAL TO THE PROJECT.

3. SEWER/WATER LINES SHALL BE PLACED IN SEPARATE TRENCHES A DISTANCE OF 15 FEET TYPICALLY OR A MINIMUM OF 10 FEET APART HORIZONTALLY. THE WATER LINE SHALL BE PLACED A MINIMUM OF 1.5 FEET HIGHER IN ELEVATION THAN THE SEWER. AT ALL CROSSINGS OF WATER AND SEWER LINES, THE WATER LINE SHALL BE MINIMUM OF 1.5 HIGHER THAN THE SEWER OR THE SEWER LINE SHALL BE C-900 PRESSURIZED PIPE.

4. SEWER & WATER LINE DISTANCES SHOWN IN PLANS ARE HORIZONTAL DISTANCES WITHOUT REGARD TO SLOPE OF PIPE OR PROJECT STATIONING.

WATER:

1. THE CONTRACTOR MUST OBTAIN WRITTEN APPROVAL FROM THE CITY OF BELEN/VALENCIA COUNTY TO OPERATE ANY VALVE OR FIRE HYDRANT INCLUDING NEW WATERLINES AND EXTENSIONS TO THE WATER SYSTEM WHICH HAVE NOT YET BEEN ACCEPTED BY ARE CONNECTED TO THE EXISTING WATER SYSTEM. ONCE APPROVAL HAS BEEN VERIFIED, THE CONTRACTOR MUST CONTACT CITY OF BELEN/VALENCIA COUNTY, 48 HOURS IN ADVANCE TO REQUEST A SHUTOFF DATE. WATER SHUT OFF MAY BE DONE AT NIGHT OR ON WEEKENDS TO ACCOMMODATE WATER CUSTOMERS.

2. WATER LINES SHALL BE CONSTRUCTED WITH A MINIMUM OF 4.0 FT. COVER MEASURED FROM FINISH GRADE TO THE TOP OF PIPE, UNLESS OTHERWISE SPECIFIED ON PLANS.

3. FOR PRESSURE WATER CONNECTIONS TO EXISTING LINES, THE CONTRACTOR SHALL NOTIFY THE CITY OF BELEN/VALENCIA COUNTY A MINIMUM OF 48 HOURS PRIOR TO THE CONNECTION.

4. CONCRETE THRUST BLOCKS SHALL BE USED ON ALL 90 DEGREE BENDS, TEES TO HYDRANTS, BEHIND HYDRANTS AND UNDER VALVES. ALL FITTINGS AND CAPS SHALL USE MEGA LUG RESTRAINTS. NO EXTRA PAYMENT WILL BE MADE FOR THESE FEATURES.

5. COMPRESSION JOINTS MAY BE USED ON COPPER SERVICE LINES EXCEPT FLARED JOINTS SHALL BE USED WHEN CONNECTING TO PLASTIC LINES.

6. THE 24" DEPTH OF SERVICE LINE BELOW FINISH SURFACE ELEVATION OF METER BOXES IS CRITICAL. METERS WILL NOT BE INSTALLED WHEN THIS DIMENSION VARIES.

7. VALVE BOXES SHALL BE BROUGHT TO SURFACE ELEVATION UPON COMPLETION OF SURFACE COURSE OF PAVEMENT. OCTAGONAL CONCRETE COLLARS SHALL BE CONSTRUCTED TO SURFACE ELEVATIONS.

8. FLUSHING OF WATER LINES SHALL BE METERED. ORDER OF PREFERENCE FOR DISPOSAL IS (1) ON AVAILABLE LAND SURFACE (2) IN STORM SEWERS OR (3) IN SANITARY SEWERS. DISPOSAL METHOD SHALL BE DISCUSSED WITH INSPECTOR.

9. FLUSHING, DISINFECTING AND TESTING OF WATERLINES SHALL BE COORDINATED WITH CITY OF BELEN/VALENCIA COUNTY UTILITY INSPECTOR.

RECORD DRAWING
DATE 9/06/2016

WILSON & COMPANY
4900 LANG AVE. NE
ALBUQUERQUE, NM 87109
PHONE: 505-348-4000
FAX: 505-348-4055 FIRST FLOOR
FAX: 505-348-4155 SECOND FLOOR
www.wilsonco.com

SEAL

PROJECT NAME
CITY OF BELEN
CAMINO DEL LLANO PONDS

REV.	DATE	DESCRIPTION	BY
1	02/2015	REVISED NOTES 14, 19, 20 ADD 21	WCI

PROJECT NO:	1160002300
DESIGNED BY:	JEL
DRAWN BY:	JEM
CHECKED BY:	CAP
DATE:	JAN 2015

SHEET TITLE
GENERAL NOTES

SHEET NO:
1-3R

M:\FS\11-600-023-00\CADD\SHEETS\01 GEN\116023_GEN.DWG 9/2/2016 4:15 PM

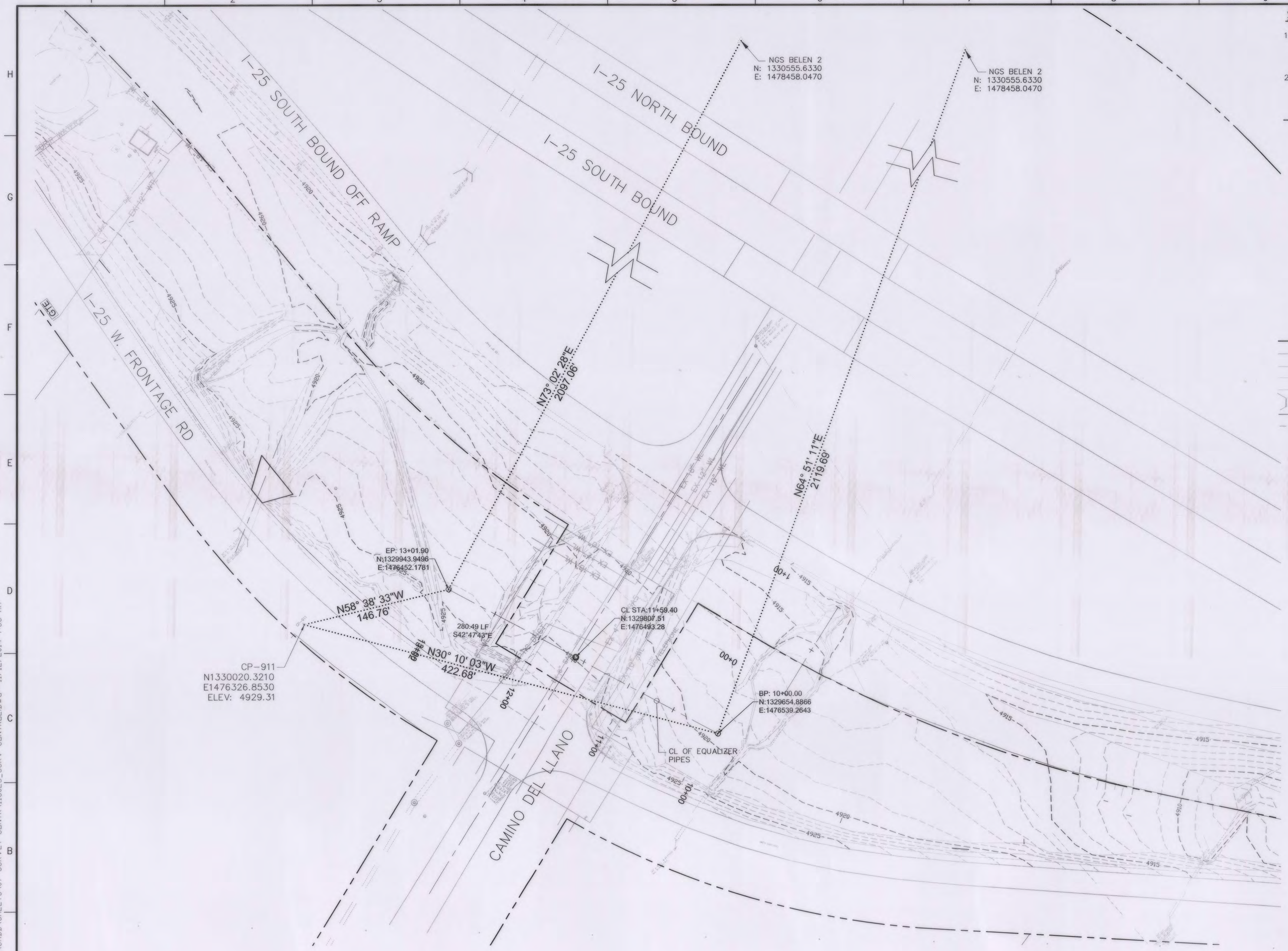

SURVEY NOTES

1. COORDINATES ARE IN STATE PLANE NAD 83 GROUND COORDINATES, CENTRAL ZONE. COMBINED GRID-TO-GROUND FACTOR =1.0003049972
2. ELEVATIONS ARE IN NAVD 88.

SYMBOL LEGEND

- TELEPHONE MANHOLE
- ELECTRIC JUNCTION BOX
- STORM SEWER MANHOLE
- SANITARY SEWER MANHOLE
- SINGLE POST SIGN (AS NOTED)
- MULTI-POST SIGN (AS NOTED)
- POWER POLE
- TRANSFORMER
- UNKNOWN WELL
- UNKNOWN VAULT
- ELECTRIC BOX
- WATER VALVE
- LIGHT POLE
- CONTROL POINT
- FIBER OPTIC LINE MARKER
- NATURAL GAS LINE MARKER
- ROW/PROP LINE
- OVERHEAD ELECTRIC LINE
- UNDERGROUND COMMUNICATION LINE
- CHAIN LINK FENCE
- BARBED WIRE FENCE
- CULVERT
- EXISTING INDEX CONTOUR
- EXISTING INTERMEDIATE CONTOUR

A1 SURVEY CONTROL AND LEGEND
1" = 50'

RECORD DRAWING
DATE 9/06/2016

WILSON & COMPANY
4900 LANG AVE. NE
ALBUQUERQUE, NM 87109
PHONE: 505-348-4000
FAX: 505-348-4055 FIRST FLOOR
FAX: 505-348-4155 SECOND FLOOR
www.wilsonco.com

SEAL

PROJECT NAME
CITY OF BELEN
CAMINO DEL LLANO PONDS

REV.	DATE	DESCRIPTION	BY

PROJECT NO:	1160002300
DESIGNED BY:	JEL
DRAWN BY:	JEM
CHECKED BY:	CAP
DATE:	JAN 2015

SHEET TITLE
SURVEY CONTROL & LEGEND

SHEET NO:
2-1

M:\JFS\11-600-023-00\CADD\SHEETS\07 SURVEY CONTR\116023_SURV CONTROL.DWG 11/12/2014 7:58 AM

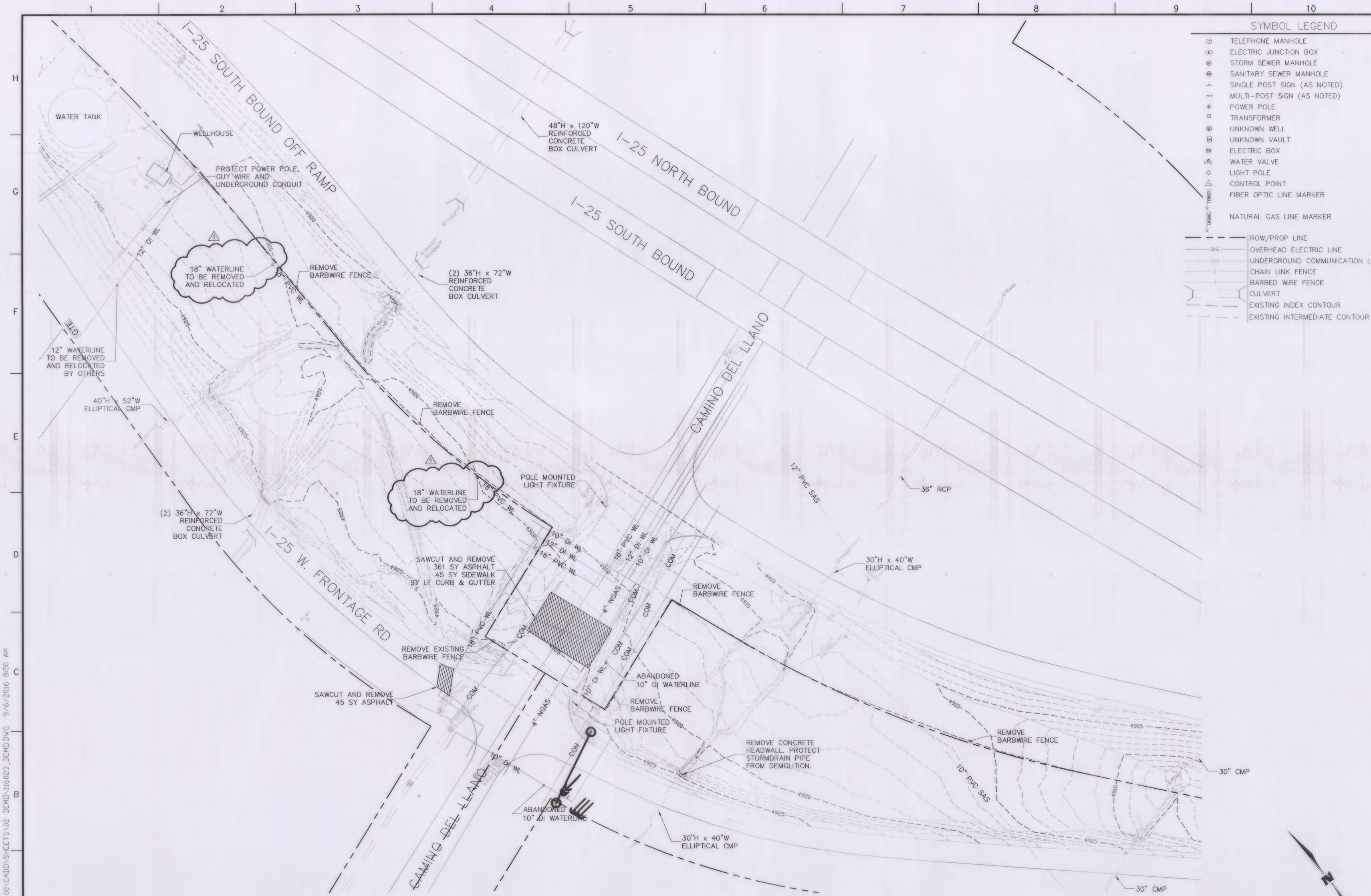

SYMBOL LEGEND

- TELEPHONE MANHOLE
- ELECTRIC JUNCTION BOX
- STORM SEWER MANHOLE
- SANITARY SEWER MANHOLE
- SINGLE POST SIGN (AS NOTED)
- MULTI-POST SIGN (AS NOTED)
- POWER POLE
- TRANSFORMER
- UNKNOWN WELL
- UNKNOWN VAULT
- ELECTRIC BOX
- WATER VALVE
- LIGHT POLE
- CONTROL POINT
- FIBER OPTIC LINE MARKER
- NATURAL GAS LINE MARKER
- ROW/PROP LINE
- OVERHEAD ELECTRIC LINE
- UNDERGROUND COMMUNICATION LINE
- CHAIN LINK FENCE
- BARBED WIRE FENCE
- CULVERT
- EXISTING INDEX CONTOUR
- EXISTING INTERMEDIATE CONTOUR

A1 DEMOLITION PLAN

SCALE: 1" = 50'

WILSON & COMPANY
4900 LANG AVE. NE
ALBUQUERQUE, NM 87109
PHONE: 505-348-4000
FAX: 505-348-4055 FIRST FLOOR
FAX: 505-348-4155 SECOND FLOOR
www.wilsonco.com

CITY OF BELEN STATE OF NEW MEXICO

SEAL

CHRIS A. PEART NEW MEXICO PROFESSIONAL ENGINEER (15656) 12/9/2015

PROJECT NAME

CITY OF BELEN
CAMINO DEL LLANO PONDS

REV	DATE	DESCRIPTION	BY
1	02/2015	REVISED WATERLINE NOTE	WCI

PROJECT NO:	1160002300
DESIGNED BY:	JEL
DRAWN BY:	JEM
CHECKED BY:	CAP
DATE:	JAN 2015

SHEET TITLE

DEMOLITION PLAN

SHEET NO:

2-2 R

M:\IFS\11-600-023-00\CADD\SHEETS\02 DEMO\116023_DEMO.DWG 9/6/2016 8:50 AM

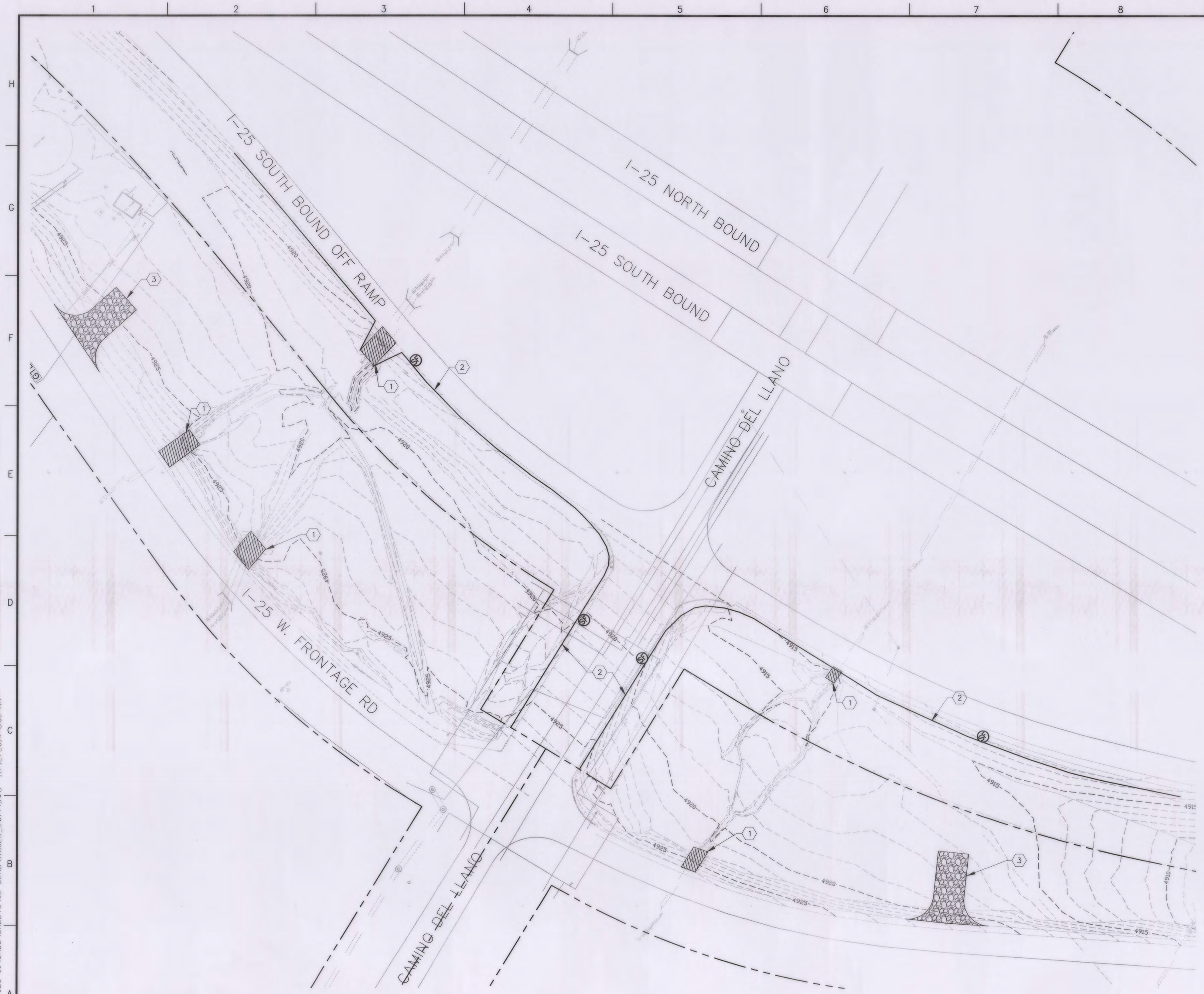

A1 SWPP PLAN
SCALE: 1" = 50'

GENERAL NOTES

1. REFER TO NMDOT SERIAL 603-01-1/7 FOR GENERAL NOTES REGARDING TEMPORARY EROSION & SEDIMENT CONTROL MEASURES.

KEYED NOTES

1. CULVERT PROTECTION. SEE NMDOT SERIAL 603-01-5/7.
2. SILT FENCE. SEE NMDOT SERIAL 603-01-3/7.
3. OFFSITE TRACKING PREVENTION. SEE NMDOT SERIAL 603-01-7/7.

RECORD DRAWING
DATE 9/06/2016

WILSON & COMPANY
4900 LANG AVE. NE
ALBUQUERQUE, NM 87109
PHONE: 505-348-4000
FAX: 505-348-4055 FIRST FLOOR
FAX: 505-348-4155 SECOND FLOOR
www.wilsonco.com

CITY OF BELEN STATE OF NEW MEXICO

SEAL: CHARLES A. PEREA NEW MEXICO 12668 PROFESSIONAL ENGINEER

PROJECT NAME
CITY OF BELEN
CAMINO DEL LLANO PONDS

REV.	DATE	DESCRIPTION	BY

PROJECT NO:	1160002300
DESIGNED BY:	JEL
DRAWN BY:	JEM
CHECKED BY:	CAP
DATE:	JAN 2015

SHEET TITLE
SWPP PLAN

SHEET NO:
2-3

M:\FS\11-600-023-00\CADD\SHEETS\02 DEMO\1160023_SWPP.DWG 11/12/2014 8:00 AM

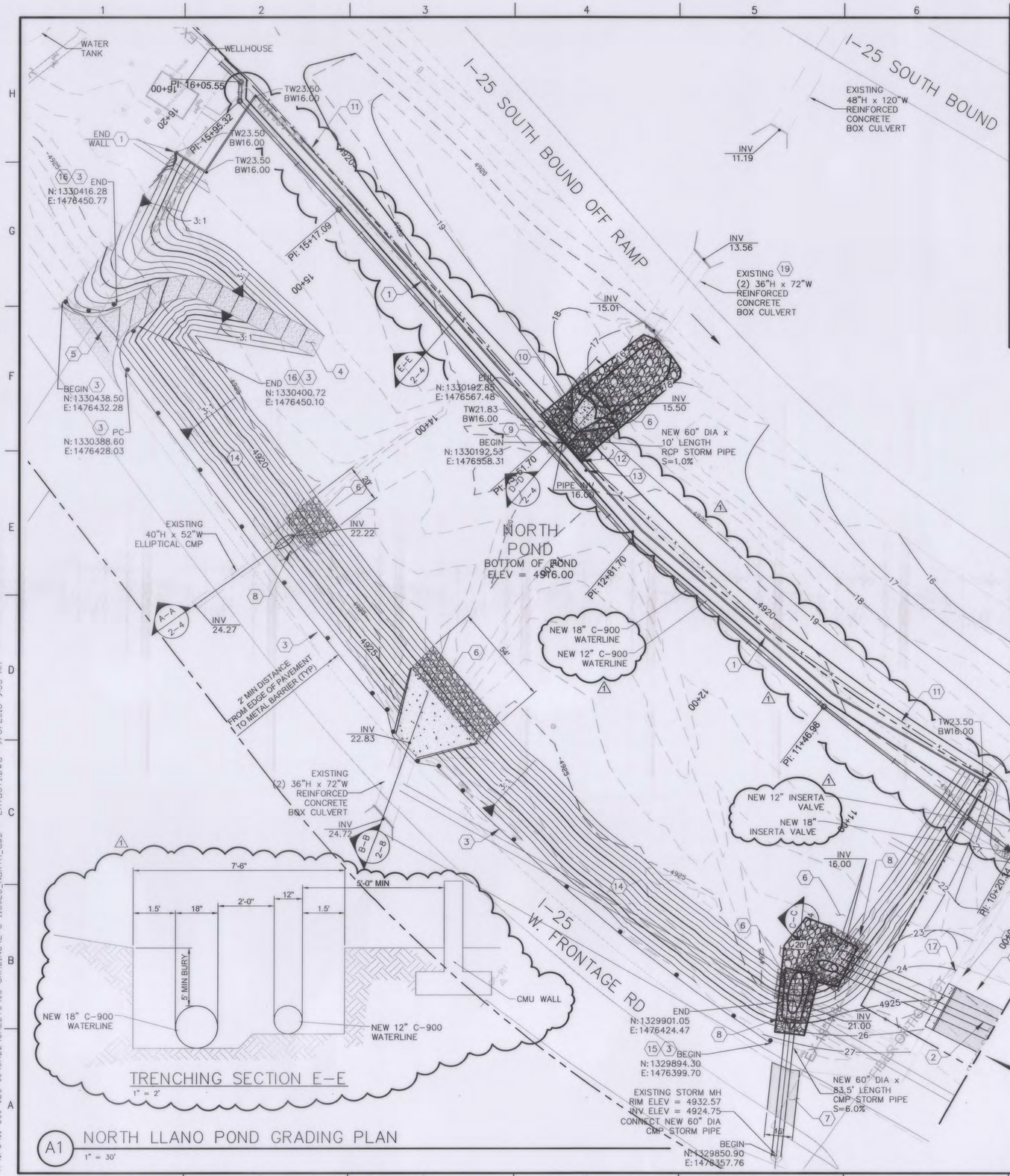

KEYED NOTES

1. CONSTRUCT CMU WALL ALONG ROW ACCESS CONTROL LINE. TOP OF WALL ELEVATION = 4923.50. SEE DETAIL SHEET 2-7. SEE SHEET 3-1 FOR PLAN & PROFILE.
2. INSTALL POND EQUALIZER PIPES. SEE SHEET 3-3 FOR PLAN & PROFILE.
3. INSTALL METAL BARRIER W-BEAM PER NMDOT STANDARD DETAILS. SEE SHEETS 12-9 THRU 12-15.
4. 12' WIDE CRUSHED GRAVEL MAIN RAMP. SEE GRAVEL SECTION, DETAIL SHEET 2-7.
5. INSTALL PIPE GATE. SEE DETAIL SHEET 2-7.
6. PROVIDE WIRE TIED RIP-RAP CLASS A AT CULVERT OUTLETS PER NMDOT STANDARD DETAILS. SEE SHEET 12-4.
7. CONSTRUCT NEW ASPHALT PAVEMENT (MATCH EXISTING ELEVATIONS). SEE ASPHALT SECTION, DETAIL SHEET 2-7.
8. CONSTRUCT PIPE CONCRETE BLANKET PER NMDOT STANDARD DETAILS. SEE SHEET 12-1.
9. CONSTRUCT OUTLET STRUCTURE. SEE DETAIL SHEET 2-6.
10. CONSTRUCT CONCRETE WINGWALLS w/APRON PER NMDOT STANDARD DETAILS. SEE SHEET 12-3.
11. INSTALL AND REPLACE BARBLESS WIRE FENCE IN SAME LOCATION AS REMOVED FENCE PER NMDOT STANDARD DETAILS. SEE SHEETS 12-16 THRU 12-17.
12. CONSTRUCT 20' LENGTH OVERFLOW WEIR. SEE DETAIL SHEET 2-7.
13. INSTALL DEPTH MARKER. MOUNT ON RETAINING WALL. SEE DETAIL SHEET 2-7.
14. PROVIDE 2" THICK GRAVEL MULCH ON SLOPES.
15. PROVIDE END ET2000 END TREATMENT AT METAL BARRIER TERMINATION.
16. PROVIDE TWIST DOWN END TREATMENT AT METAL BARRIER TERMINATION.
17. CONSTRUCT NEW SIDEWALK (MATCH EXISTING ELEVATIONS). SEE SHEET 2-7.
18. CONSTRUCT NEW 6" CURB AND GUTTER. (MATCH EXISTING ELEVATIONS). SEE SHEET 2-7.
19. EXTEND EXISTING 72"W x 36"H CBC STRUCTURE.

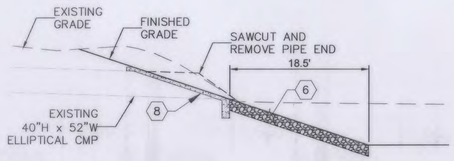

STORM DRAIN SECTION A-A
1" = 10'

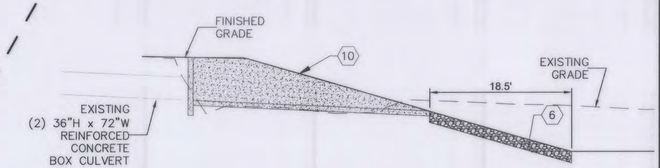

STORM DRAIN SECTION B-B
1" = 10'

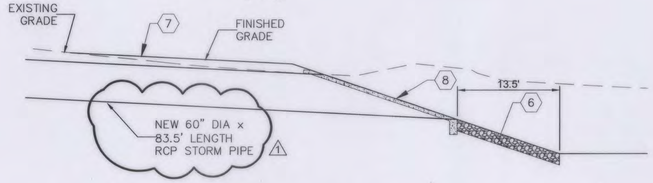

STORM DRAIN SECTION C-C
1" = 10'

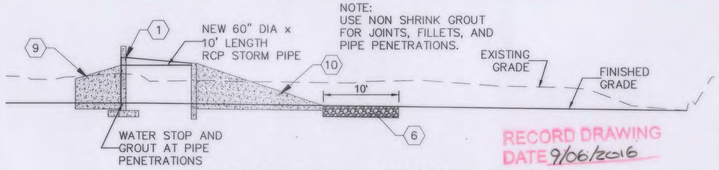

STORM DRAIN SECTION D-D
1" = 10'

RECORD DRAWING
DATE 9/06/2016

WILSON & COMPANY
4900 LANG AVE. NE
ALBUQUERQUE, NM 87109
PHONE: 505-348-4000
FAX: 505-348-4055 FIRST FLOOR
FAX: 505-348-4155 SECOND FLOOR
www.wilsonco.com

SEAL

PROJECT NAME
CITY OF BELEN
CAMINO DEL LLANO PONDS

REV.	DATE	DESCRIPTION	BY
1	02/2015	REVISE NOTE ADDED WATERLINE	WCI

PROJECT NO:	1160002300
DESIGNED BY:	JEL
DRAWN BY:	JEM
CHECKED BY:	CAP
DATE:	JAN 2015

SHEET TITLE
NORTH POND GRADING & DRAINAGE PLAN

SHEET NO:
2-4R

M:\FS\11-600-023-00\CADD\SHEETS\03 GRADING\2-8 116023_NORTH_G&D - LAYOUT1.DWG 9/6/2016 9:35 AM

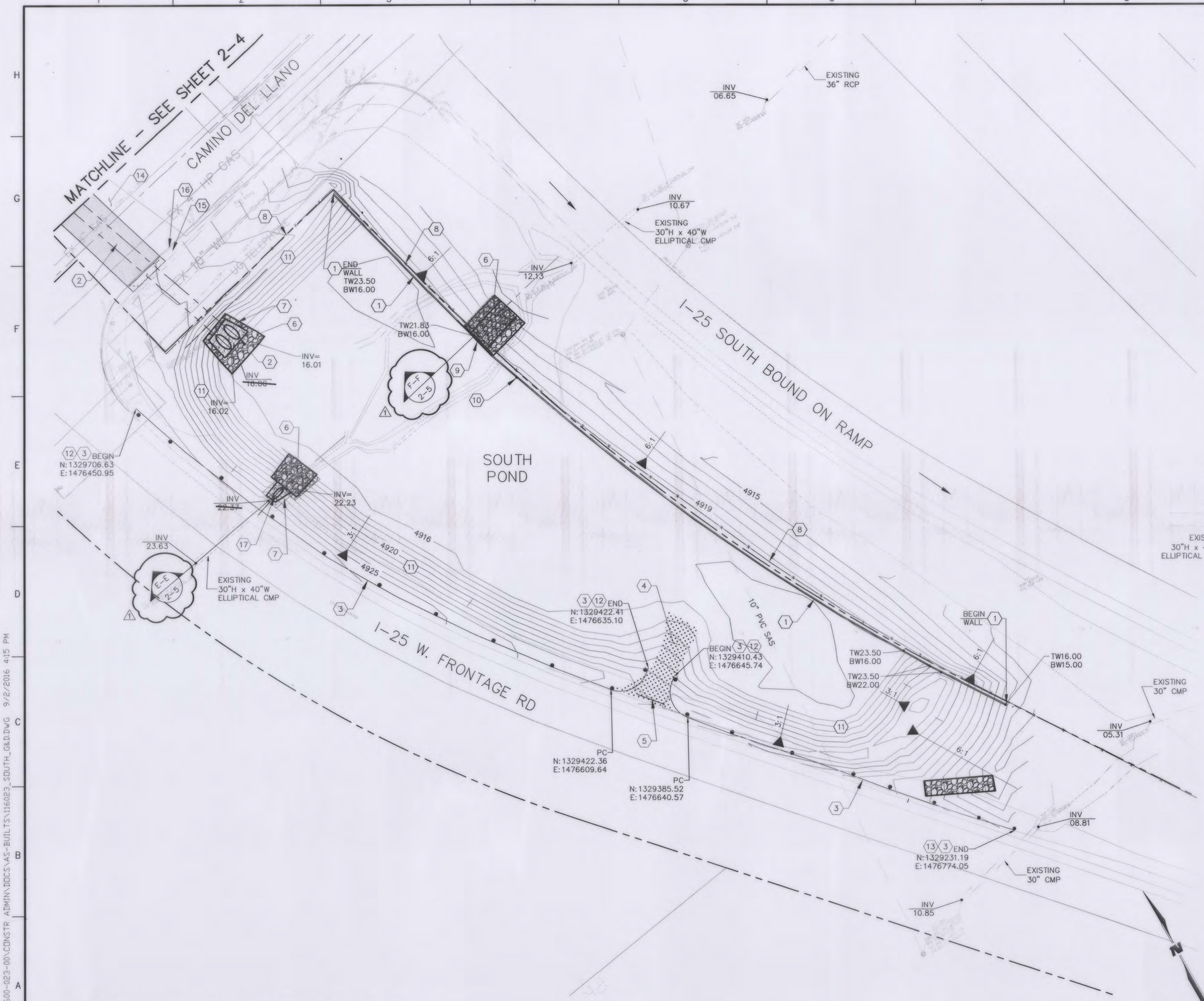

A1 SOUTH LLANO POND GRADING PLAN

1" = 30'

KEYED NOTES

1. CONSTRUCT CMU WALL ALONG ROW ACCESS CONTROL LINE. TOP OF WALL ELEVATION = 4923.50. SEE DETAIL SHEET 2-7. SEE SHEET 3-1 FOR PLAN & PROFILE.
2. INSTALL POND EQUALIZER PIPES. SEE SHEET 3-3 FOR PLAN & PROFILE.
3. INSTALL METAL BARRIER W-BEAM PER NMDOT STANDARD DETAILS. SEE SHEETS 12-9 THRU 12-15.
4. 4' WIDE CRUSHED GRAVEL MAIN RAMP. SEE GRAVEL SECTION, DETAIL SHEET 2-7.
5. INSTALL PIPE GATE. SEE DETAIL SHEET 2-7.
6. PROVIDE WIRE TIED RIP-RAP CLASS A PER NMDOT STANDARD DETAILS. SEE SHEET 12-4.
7. CONSTRUCT PIPE CONCRETE BLANKET PER NMDOT STANDARD DETAILS. SEE SHEET 12-1.
8. INSTALL AND REPLACE BARBLESS WIRE FENCE IN SAME LOCATION AS REMOVED FENCE PER NMDOT STANDARD DETAILS. SEE SHEETS 12-16 THRU 12-17.
9. CONSTRUCT 18' LENGTH OVERFLOW WEIR. SEE DETAIL SHEET 2-7.
10. INSTALL DEPTH MARKER. MOUNT ON RETAINING WALL. SEE DETAIL SHEET 2-7.
11. PROVIDE 2" THICK GRAVEL MULCH ON SLOPES.
12. PROVIDE END ET2000 END TREATMENT AT METAL BARRIER TERMINATION.
13. PROVIDE TWIST DOWN END TREATMENT AT METAL BARRIER TERMINATION.
14. CONSTRUCT NEW ASPHALT PAVEMENT (MATCH EXISTING ELEVATIONS). SEE ASPHALT SECTION DETAIL SHEET 2-7.
15. CONSTRUCT NEW SIDEWALK (MATCH EXISTING ELEVATIONS). SEE SIDEWALK DETAIL, SHEET 2-7.
16. CONSTRUCT NEW 6" CURB AND GUTTER (MATCH EXISTING ELEVATIONS). SEE CURB & GUTTER DETAIL, SHEET 2-7.
17. EXTEND EXISTING 40"W x 30"H ELLIPTICAL CMP.

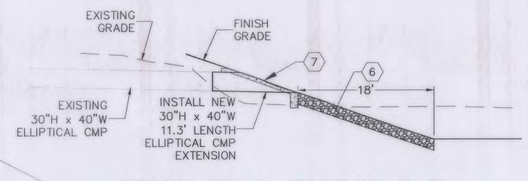

STORM DRAIN SECTION E-E

1" = 10'

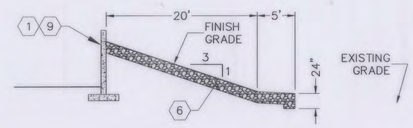

WEIR SECTION F-F

1" = 10'

RECORD DRAWING
DATE 9/06/2016

WILSON & COMPANY
4900 LANG AVE. NE
ALBUQUERQUE, NM 87109
PHONE: 505-348-4000
FAX: 505-348-4055 FIRST FLOOR
FAX: 505-348-4155 SECOND FLOOR
www.wilsonco.com

CITY OF BELEN STATE OF NEW MEXICO

SEAL

PROJECT NAME: CITY OF BELEN CAMINO DEL LLANO PONDS

REV.	DATE	DESCRIPTION	BY
1	02/2015	REVISE SECTION CALL OUT	WCI

PROJECT NO:	1160002300
DESIGNED BY:	JEL
DRAWN BY:	JEM
CHECKED BY:	CAP
DATE:	JAN 2015

SHEET TITLE: SOUTH POND GRADING & DRAINAGE PLAN

SHEET NO: 2-5R

H:\JFS\11-600-023-00\CONSTR ADMIN\DDCS\AS-BUILTS\116023_SOUTH_G&D.DWG 9/2/2016 4:15 PM

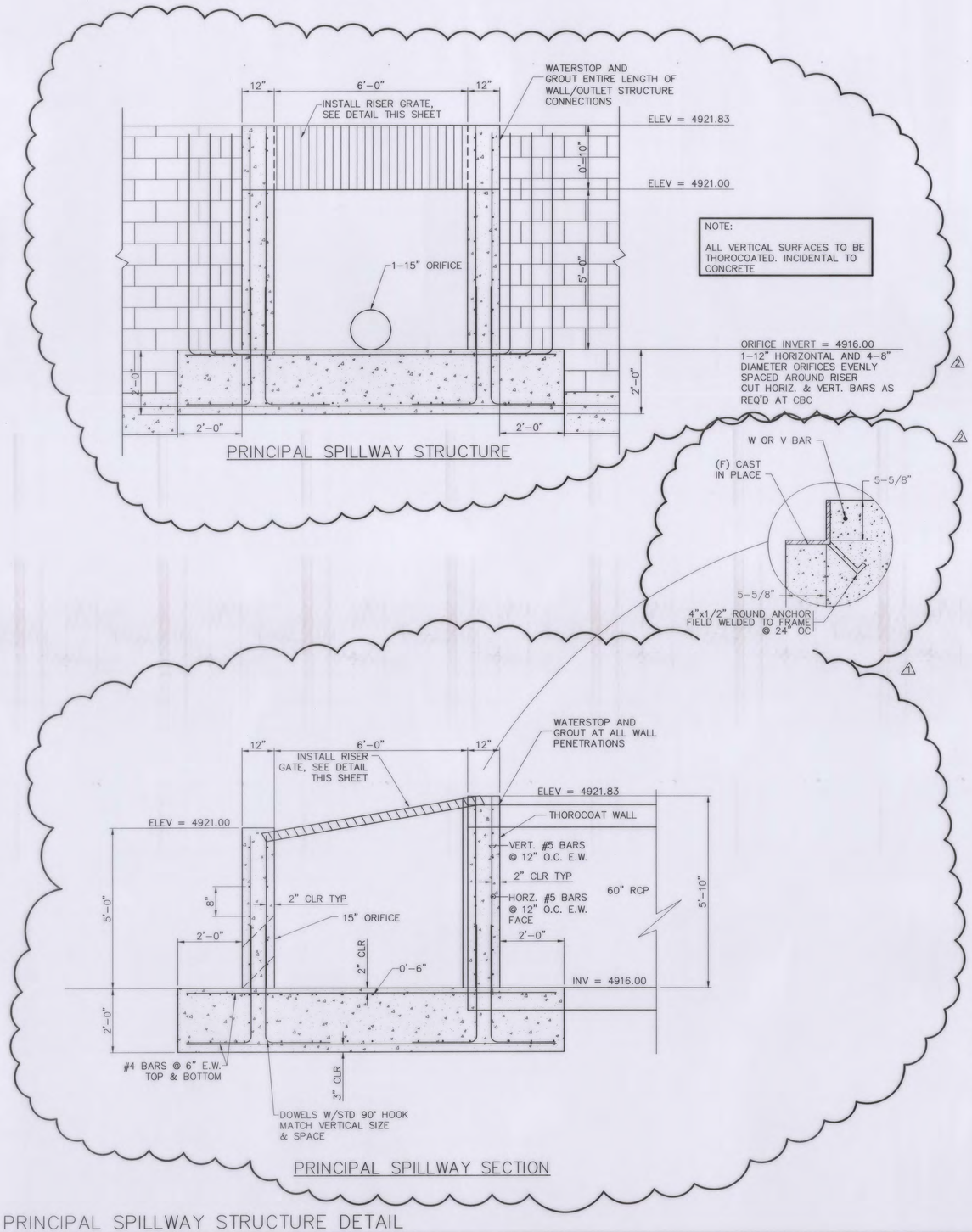

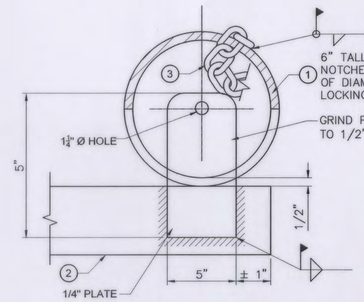

STEEL LOCK RECEIVER

KEYED NOTES

1. 4" Ø SCH. 40 PIPE.
2. HSS 2x2x1/8 TUBE FRAME
3. 1/4" x 24" LONG GALVANIZED CHAIN WELDED TO FRAME AND BOTH LOCKS, LOCKS SUPPLIED BY CITY OF BELEN.

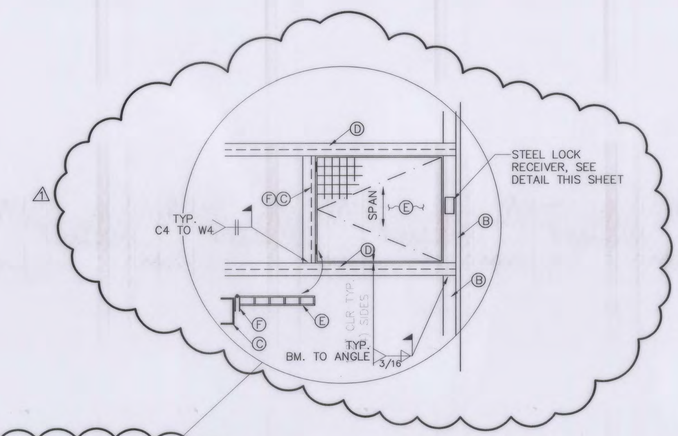

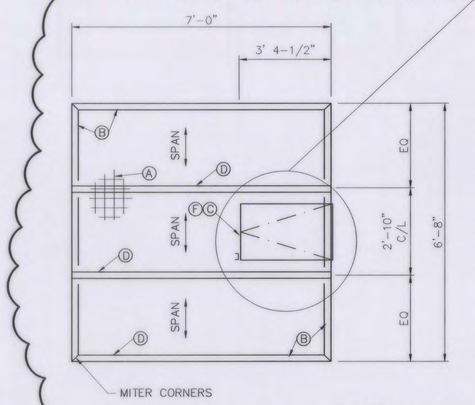

RISER GRATE-PLAN

KEYED NOTES:

- Ⓐ GRATING – STEEL, TYPE W-38-4 W/ 1 1/2" x 1/16" BEARING BARS, SPAN AS SHOWN
- Ⓑ L5 x 5 x 5/16 LLV EDGE BEARING ANGLE WITH ANCHORS, CLIP LONG LEG TO 5 1/2" LENGTH
- Ⓒ HATCH SUPPORT CHANNEL – C4 x 5.4
- Ⓓ GRATING SUPPORT BEAM – W4 x 13
- Ⓔ GRATING HATCH – STEEL, TYPE W-38-4 W/ 1 1/2" x 3/16" BEARING BARS , SPAN SHOWN, W/ BANDING AT ENDS
- Ⓕ HEAVY DUTY WELDABLE BARREL HINGE
- Ⓖ WELD 2- 1/2"x2"x3" STEEL LOCK RECEIVER.

RECORD DRAWING
DATE 9/06/2016

A1 PRINCIPAL SPILLWAY STRUCTURE DETAIL
NTS

WILSON & COMPANY
4900 LANG AVE. NE
ALBUQUERQUE, NM 87109
PHONE: 505-348-4000
FAX: 505-348-4055 FIRST FLOOR
FAX: 505-348-4155 SECOND FLOOR
www.wilsonco.com

SEAL

PROJECT NAME
CITY OF BELEN
CAMINO DEL LLANO PONDS

REV.	DATE	DESCRIPTION	BY
1	05/2015	STRUCTURE REVISION	WCI
1	04/2015	STRUCTURE REVISION	

PROJECT NO:	1160002300
DESIGNED BY:	JEL
DRAWN BY:	JEM
CHECKED BY:	CAP
DATE:	JAN 2015

SHEET TITLE
PRINCIPAL SPILLWAY STRUCTURE DETAIL

SHEET NO:
2-6

M:\FS\11-600-023-00\CADD\SHEETS\05 DETAILS\116023_DETAIL01.DWG 9/6/2016 9:03 AM

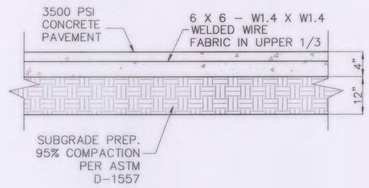

G1 SIDEWALK
NTS

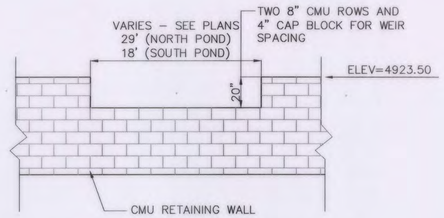

G3 WEIR OVERFLOW
NTS

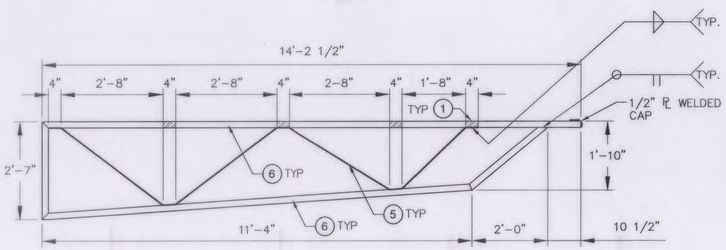

ACCESS CONTROL GATE PROFILE

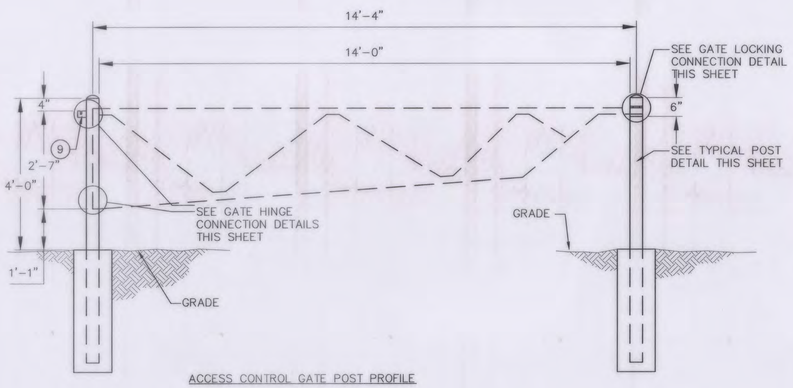

ACCESS CONTROL GATE POST PROFILE

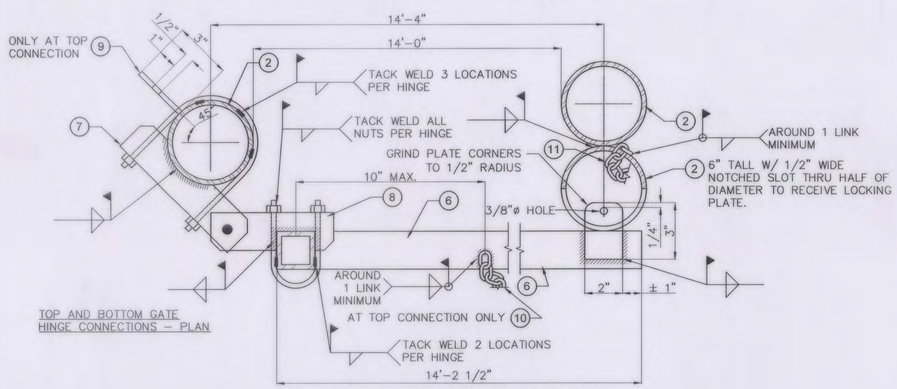

TOP AND BOTTOM GATE HINGE CONNECTIONS – PLAN

GATE LOCKING CONNECTION – PLAN

A1 ACCESS CONTROL GATE DETAIL
NTS

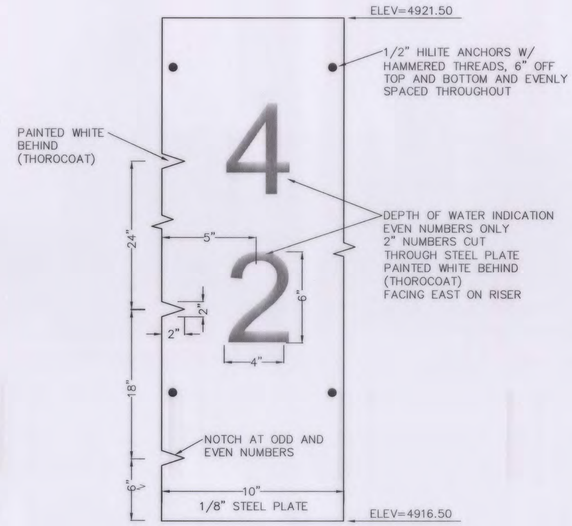

E5 DEPTH MARKER
NTS

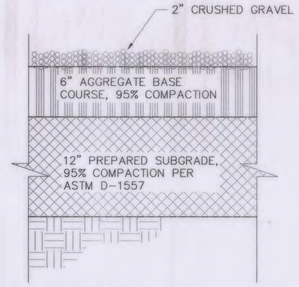

C5 GRAVEL SECTION
NTS

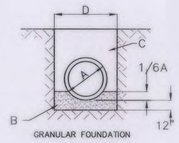

CLASS C

KEYED NOTES:

A. OUTSIDE DIAMETER OF PIPE

B. COMPACTED GRANULAR MATERIAL

C. COMPACTED FILL PER SECTION 700 PER PIPE MATERIAL

D. WIDTH OF TRENCH. TRENCH SIDE SLOPES MUST CONFORM WITH OSHA REQUIREMENTS.

NOTE:

1. CONSTRUCTION PLANS SHALL INDICATE THE CLASS OF BEDDING. CHANGE OF BEDDING MAY REQUIRE CHANGE IN PIPE CLASSIFICATION OR WALL THICKNESS.

2. THIS DETAIL IS FOR NON-PERFORATED PIPES ONLY

A5 PIPE TRENCHING DETAIL
NTS

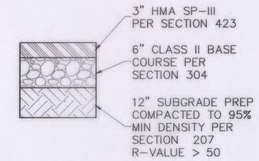

G7 ASPHALT SECTION
NTS

CURB & GUTTER CONSTRUCTION NOTES:

A. CURB & GUTTER SHALL BE 3500 PSI P.C.C. UNLESS OTHERWISE NOTED.

B. EXPOSED EDGES NOT SPECIFICALLY DIMENSIONED SHALL BE EDGED WITH A 3/8" EDGING TOOL.

C. REMOVE & REPLACE 12-INCH WIDE STRIP OF PAVEMENT BEYOND LIP OF GUTTER WHEN CONSTRUCTING NEW CURB & GUTTER ADJACENT TO EXISTING A.C. PAVEMENT.

D. DIMENSIONS AT ROUNDED CORNERS MEASURED TO INTERSECTION OF STRAIGHT LINES.

E. PROVIDE CONTROL JTS. @ 10' O.C., PROVIDE EXPANSION JTS. @ 32' O.C., AT CURB RETURNS & ADJACENT TO BUILDINGS & WALLS.

F. FOR STREET CURB & GUTTER PROVIDE CONTROL JTS @ 6' O.C. MAX, ALSO PROVIDE 1/2" EXPANSION JTS @ 24' O.C. MAX, AT CURB RETURNS, & AT EACH SIDE OF DRIVEWAYS.

KEYED NOTES: ⬭

1. PAVEMENT SECTION PER DRAWINGS AND SPECS.
2. FINISHED GRADE.
3. PREPARED SUBGRADE, 95% COMPACTION, 12" DEEP.
4. 3/4" RADIUS.
5. 1 1/2" RADIUS.
6. CONCRETE ALLEY GUTTER.
7. CONCRETE CURB.
8. #4 REBAR @ 18" OC W/ 2" MIN CLEARANCE.
9. TACK COAT.
10. SMOOTH RUBBED FINISH.

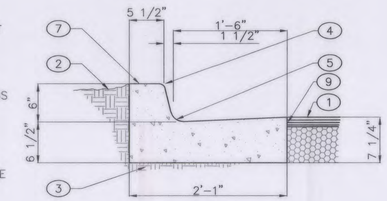

6" CURB & GUTTER

E7 CURB & GUTTER DETAIL
NTS

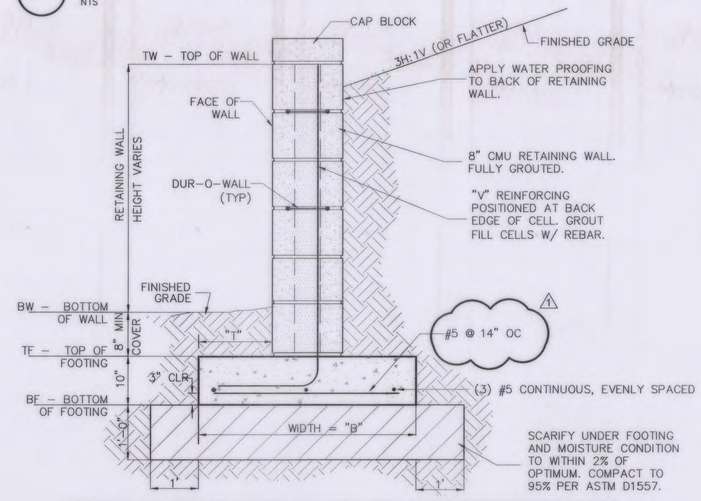

DESIGN NO.	RET. WALL HT.	BLOCK	"B" FOOTING WIDTH	"T" TOE WIDTH	"V"	"FB"	FL2	"D"
1	#2'-6"	8"	2'-6"	1'-0"	#5@ 40"O.C.	#5@ 14"O.C.	3-#5 CONT	12" SUBGRADE PREP
2	>2'-6" #4'	8"	3'-1"	1'-2"	#5@ 8"O.C.	#5@ 14"O.C.	3-#5 CONT	12" SUBGRADE PREP
3	>4' #6'	8"	3'-8"	1'-6"	#5@ 8"O.C.	#5@ 14"O.C.	3-#5 CONT	12" SUBGRADE PREP
4	>6' #8.5'	8"	4'-0"	1'-8"	#5@ 8"O.C.	#5@ 14"O.C.	3-#5 CONT	12" SUBGRADE PREP

RECORD DRAWING
DATE 9/06/2016

A7 RETAINING WALL DETAIL
NTS

WILSON & COMPANY
4900 LANG AVE. NE
ALBUQUERQUE, NM 87109
PHONE: 505-348-4000
FAX: 505-348-4025 FIRST FLOOR
FAX: 505-348-4155 SECOND FLOOR
www.wilsonco.com

CITY OF BELEN STATE OF NEW MEXICO

SEAL

CHRIS A. PEREA NEW MEXICO 15686 PROFESSIONAL ENGINEER 02/19/2015

PROJECT NAME: CITY OF BELEN CAMINO DEL LLANO PONDS

REV.	DATE	DESCRIPTION	BY
1	02/2015	REVISED NOTE	WCI

PROJECT NO:	1160002300
DESIGNED BY:	JEL
DRAWN BY:	JEM
CHECKED BY:	CAP
DATE:	JAN 2015

SHEET TITLE: MISCELLANEOUS DETAILS

SHEET NO: 2-7R

M:\FS\11-600-023-00\CADD\SHEETS\05 DETAILS\116023_DETAIL01.DWG 9/2/2016 4:14 PM

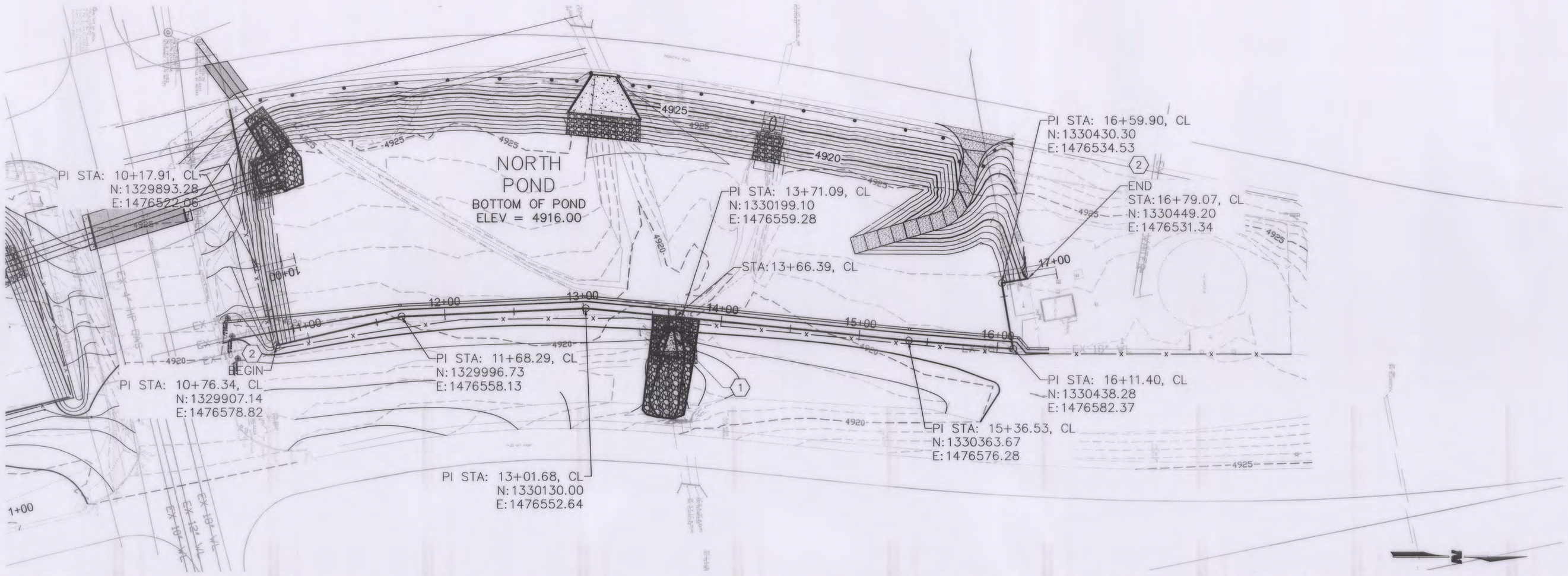

PLAN: 1" = 50' PROFILE: 1" = 50' HORIZ
1" = 5' VERT

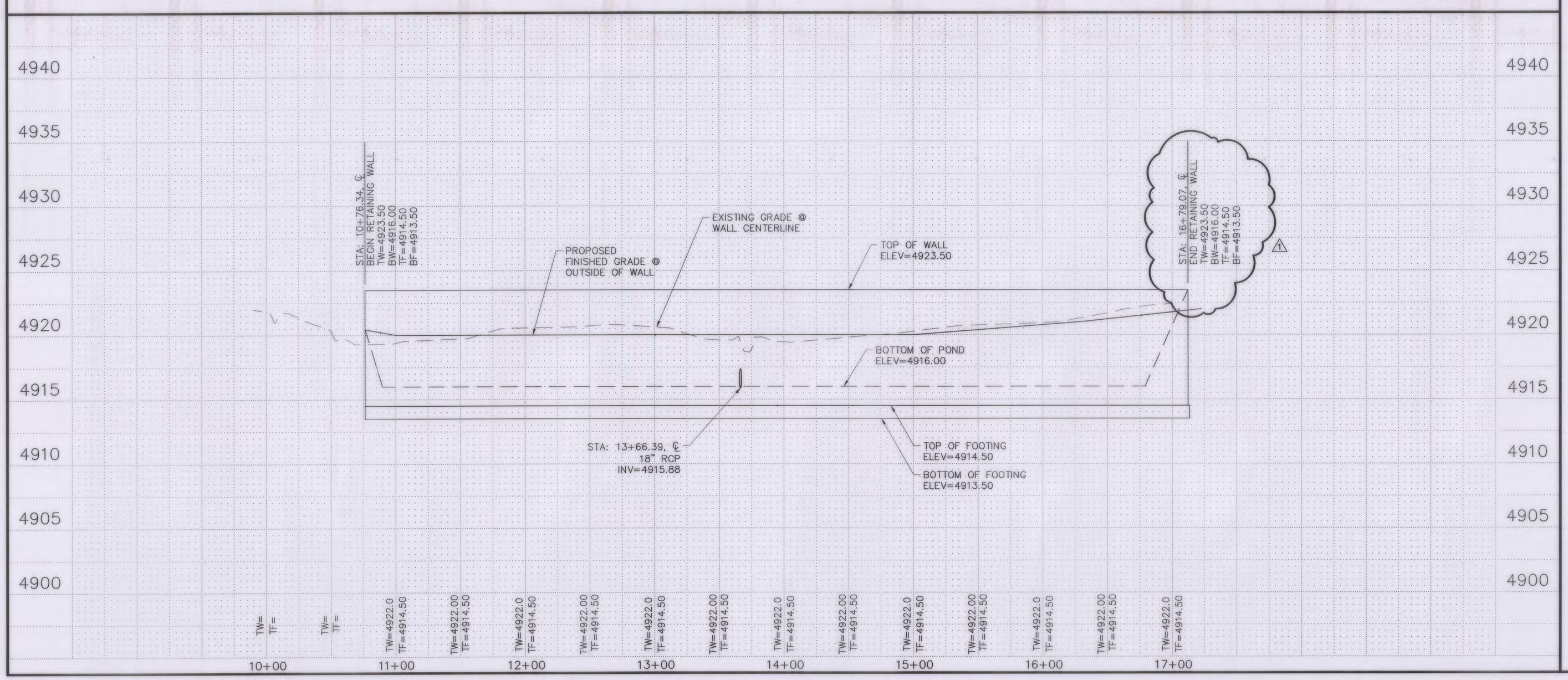

GENERAL NOTES

1. SEE SHEET 2-4 FOR NORTH POND GRADING.
2. CONTRACTOR SHALL COMPLY WITH SHEET 1-3, GENERAL NOTE 18.

KEYED NOTES

1. CONSTRUCT OUTLET STRUCTURE. SEE DETAIL SHEET 2-6.
2. CONSTRUCT RETAINING WALL. SEE DETAIL SHEET 2-7.

WILSON & COMPANY
4900 LANG AVE. NE
ALBUQUERQUE, NM 87109
PHONE: 505-348-4000
FAX: 505-348-4055 FIRST FLOOR
FAX: 505-348-4155 SECOND FLOOR
www.wilsonco.com

CONSULTANTS

SEAL

CHRIS A. PEREA
NEW MEXICO
13686
PROFESSIONAL ENGINEER
02/13/2015

PROJECT NAME

CITY OF BELEN
CAMINO DEL LLANO PONDS

REV.	DATE	DESCRIPTION	BY
1	02/2015	REVISE STATION CALLOUT	WCI

PROJECT NO:	1160002300
DESIGNED BY:	JEL
DRAWN BY:	JEM
CHECKED BY:	CAP
DATE:	JAN 2015

SHEET TITLE

NORTH POND
RETAINIING WALL
PLAN & PROFILE

SHEET NO:

3-1R

RECORD DRAWING
DATE 9/06/2016

M:\IFS\11-600-023-00\CADD\SHEETS\04 PNP\116023_PNP01.DWG 9/2/2016 4:03 PM

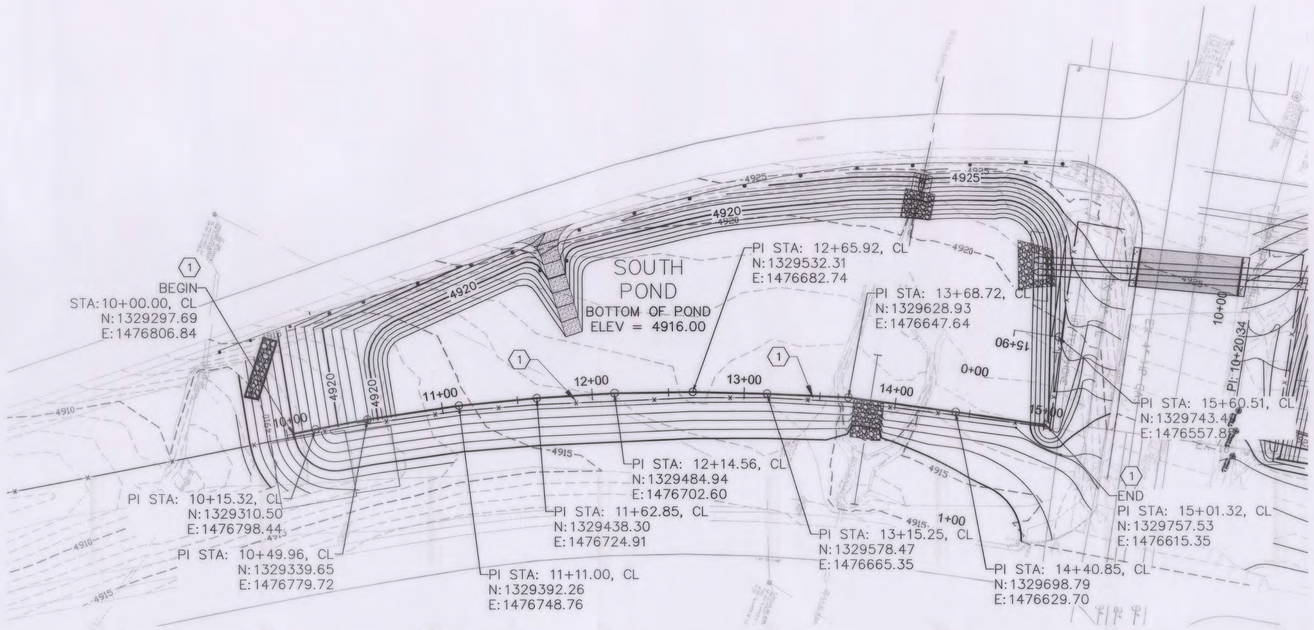

PLAN: 1" = 50' PROFILE: 1" = 50' HORIZ
1" = 5' VERT

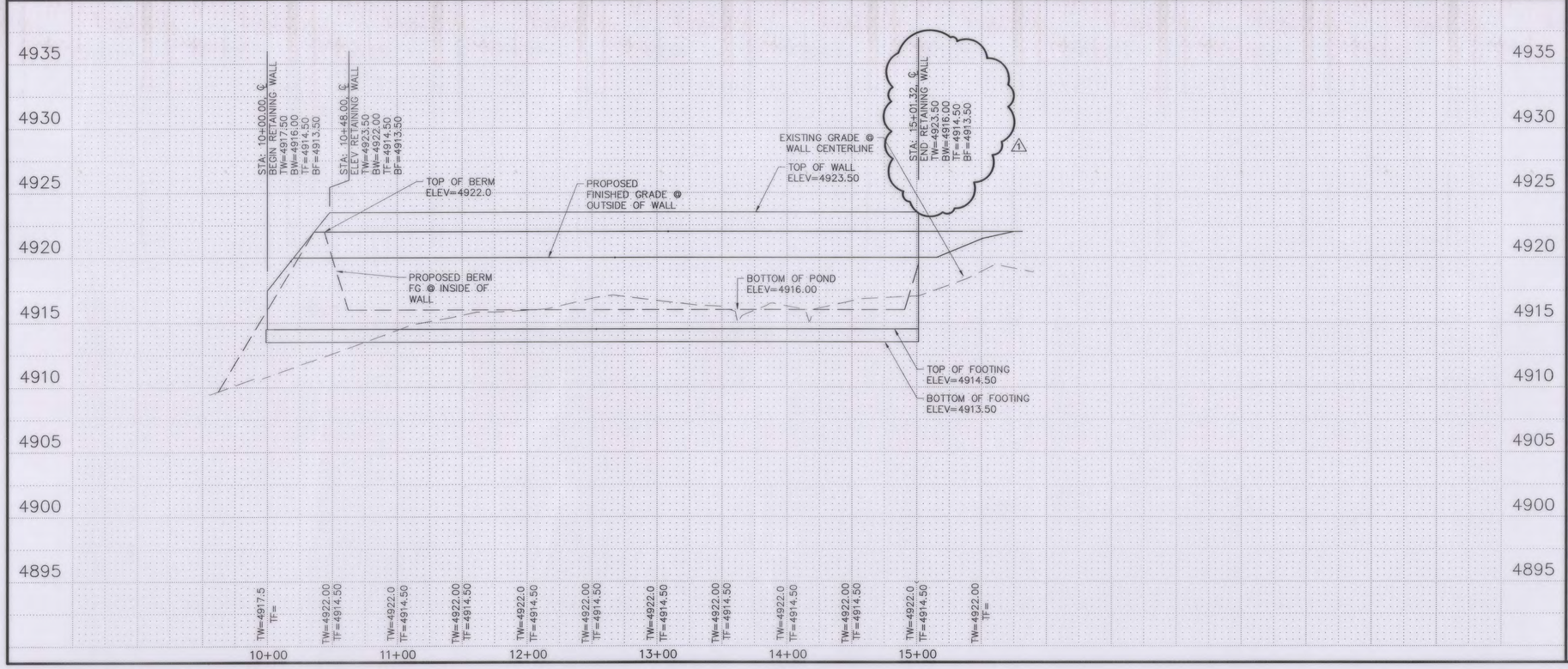

GENERAL NOTES

1. SEE SHEET 2-4 FOR NORTH POND GRADING.
2. CONTRACTOR SHALL COMPLY WITH SHEET 1-3, GENERAL NOTE 18.

KEYED NOTES

1. CONSTRUCT RETAINING WALL. SEE DETAIL SHEET 2-7.

WILSON & COMPANY
4900 LANG AVE. NE
ALBUQUERQUE, NM 87109
PHONE: 505-348-4000
FAX: 505-348-4055 FIRST FLOOR
FAX: 505-348-4155 SECOND FLOOR
www.wilsonco.com

CONSULTANTS

SEAL

CHRIS A. PEREA
NEW MEXICO
13686
PROFESSIONAL ENGINEER
02/13/2015

PROJECT NAME

CITY OF BELEN
CAMINO DEL LLANO PONDS

REV.	DATE	DESCRIPTION	BY
1	02/2015	REVISE STATION CALLOUT	WCI

PROJECT NO:	1160002300
DESIGNED BY:	JEL
DRAWN BY:	JEM
CHECKED BY:	CAP
DATE:	JAN 2015

SHEET TITLE

SOUTH POND RETAINIING WALL PLAN & PROFILE

SHEET NO:

3-2R

RECORD DRAWING
DATE 9/06/2016

M:\FS\11-600-023-00\CAD\SHEETS\04 PNP\1160023_PNP01.DWG 9/2/2016 4:03 PM

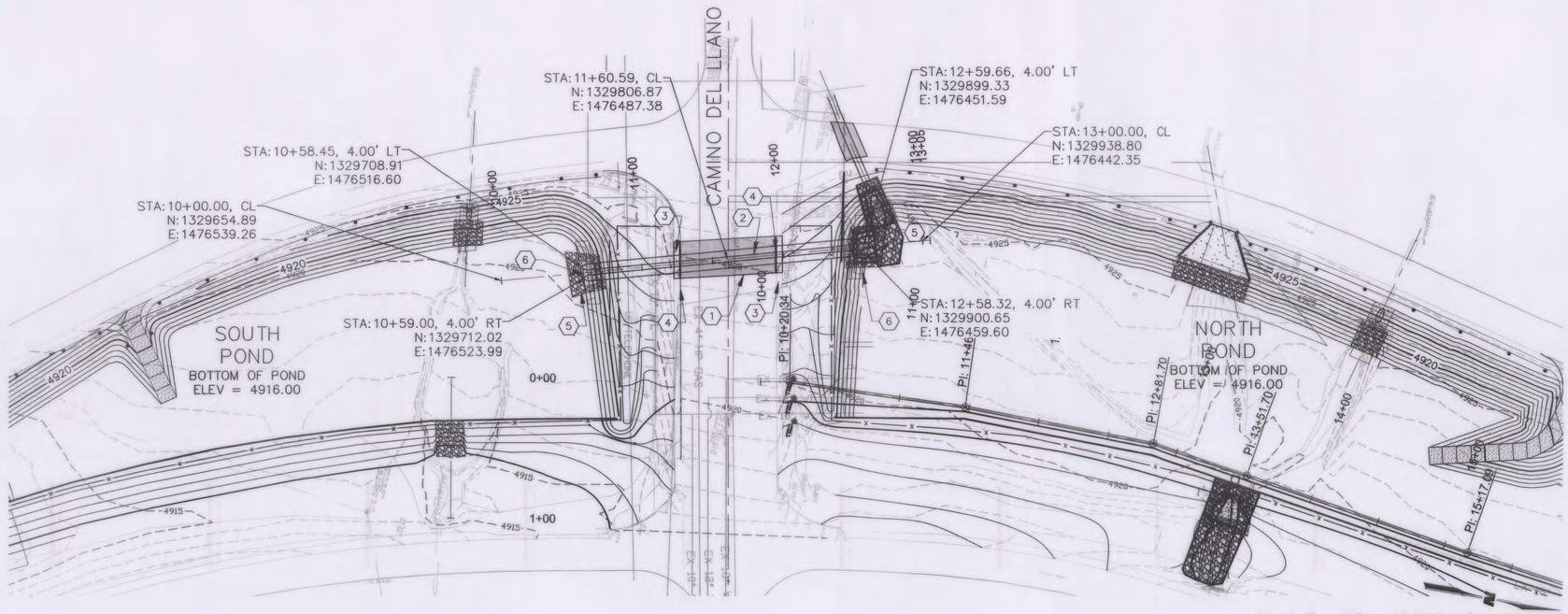

PLAN: 1" = 50' PROFILE: 1" = 50' HORIZ
1" = 5' VERT

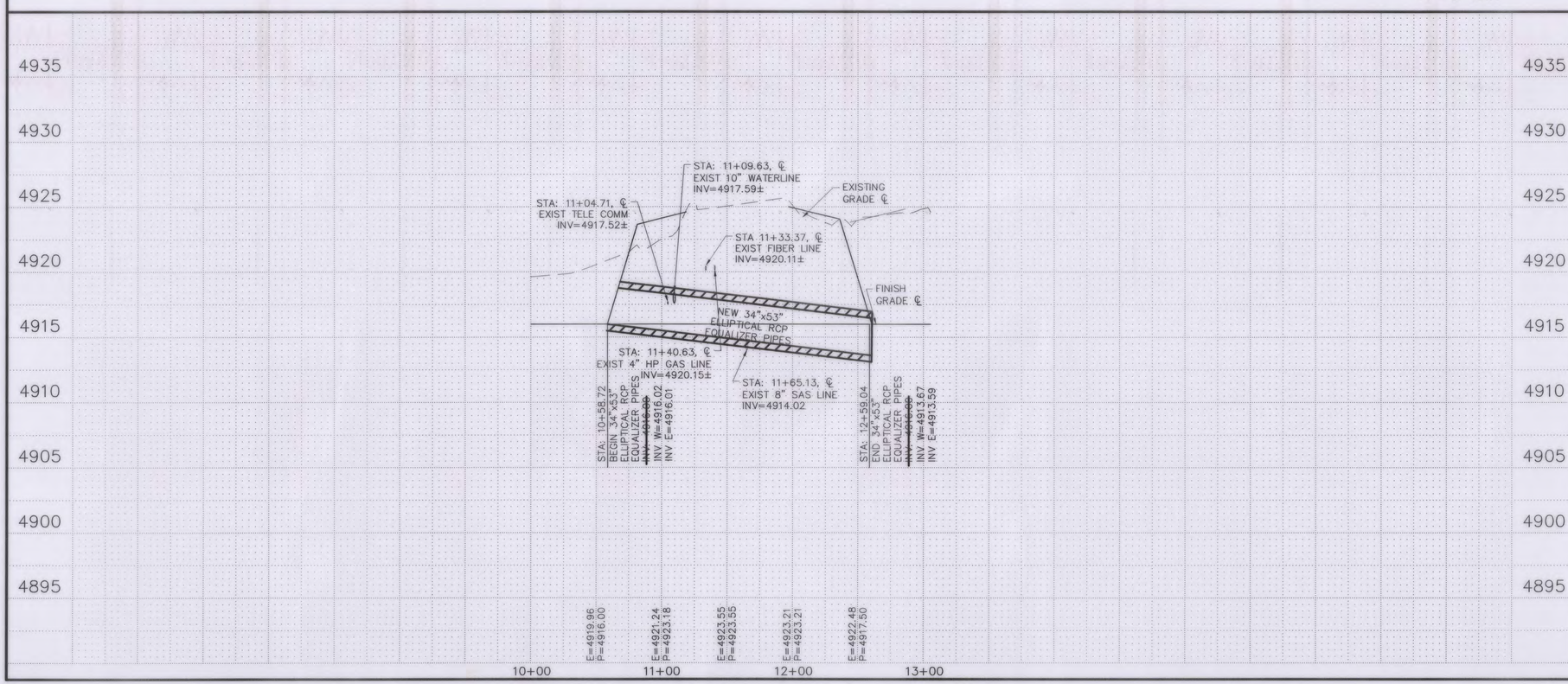

GENERAL NOTES

1. SEE SHEET 2-4 FOR NORTH POND GRADING.
2. CONTRACTOR SHALL COMPLY WITH SHEET 1-3, GENERAL NOTE 18.

KEYED NOTES

1. INSTALL (2) 34"x53" ELLIPTICAL RCP PIPES WITH CONCRETE BLANKETS EACH END. SEE NMDOT STANDARD DETAILS. SEE SHEET 12-2. L = 200 FT.
2. CONSTRUCT NEW ASPHALT PAVEMENT (MATCH EXISTING ELEVATIONS). SEE ASPHALT SECTION, DETAIL SHEET 2-7.
3. CONSTRUCT NEW SIDEWALK (MATCH EXISTING ELEVATIONS). SEE SIDEWALK DETAIL, SHEET 2-7.
4. CONSTRUCT NEW 6" CURB & GUTTER (MATCH EXISTING ELEVATIONS). SEE CURB & GUTTER DETAIL, SHEET 2-7.
5. PROVIDE WIRE TIED RIP-RAP CLASS A PER NMDOT STANDARD DETAIL 602-02-1/1.
6. CONSTRUCT PIPE CONCRETE BLANKET PER NMDOT STANDARD DETAIL 511-11-2/2, SHEET 12-1.

RECORD DRAWING
DATE 9/06/2016

WILSON & COMPANY
4900 LANG AVE. NE
ALBUQUERQUE, NM 87109
PHONE: 505-348-4000
FAX: 505-348-4055 FIRST FLOOR
FAX: 505-348-4155 SECOND FLOOR
www.wilsonco.com

CONSULTANTS

SEAL
CHRIS A. PEREA
NEW MEXICO
13686
PROFESSIONAL ENGINEER
02/13/2015

PROJECT NAME
CITY OF BELEN
CAMINO DEL LLANO PONDS

REV.	DATE	DESCRIPTION	BY

PROJECT NO:	1160002300
DESIGNED BY:	JEL
DRAWN BY:	JEM
CHECKED BY:	CAP
DATE:	JAN 2015

SHEET TITLE
POND EQUALIZER PIPES PLAN & PROFILE

SHEET NO:
3-3

M:\IFS\11-600-023-00\CADD\SHEETS\04 PNP\116023_PNP01.DWG 9/2/2016 3:48 PM

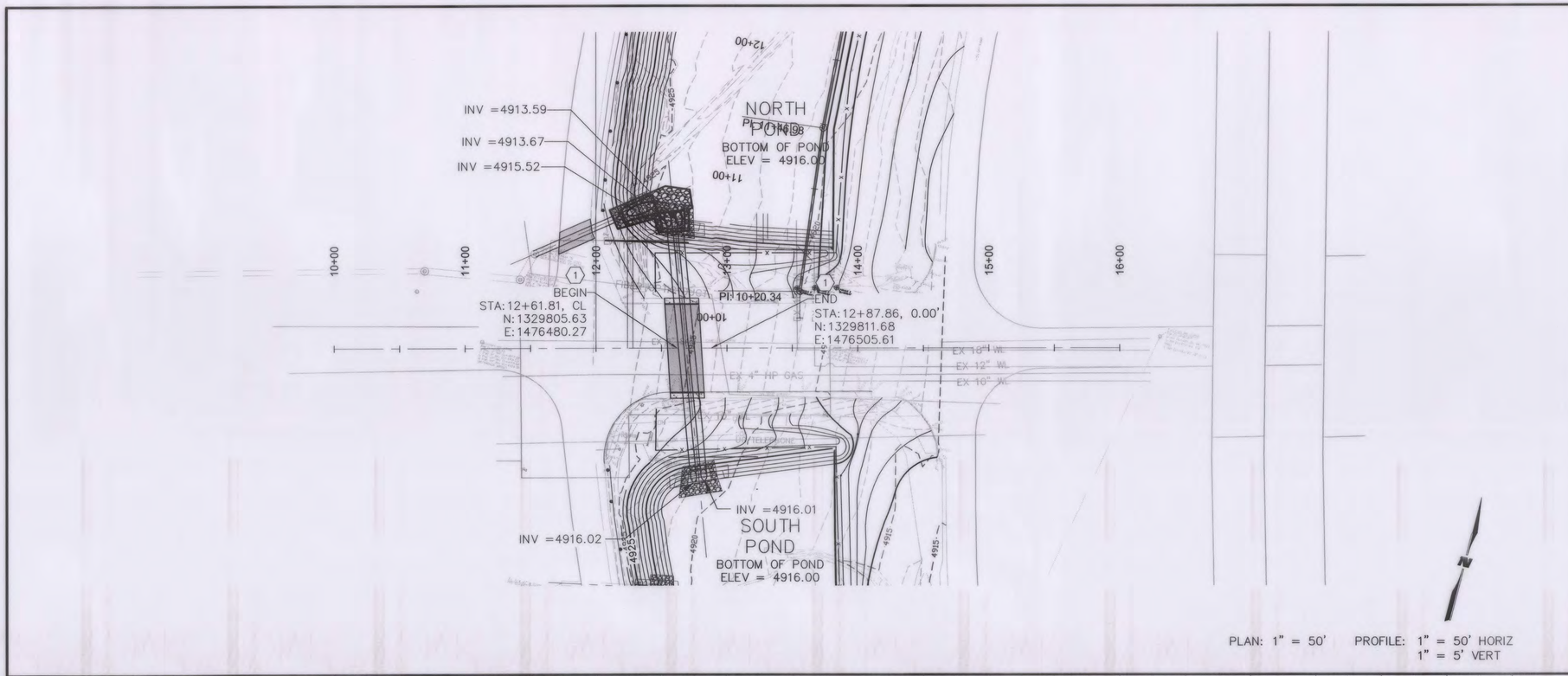

PLAN: 1" = 50' PROFILE: 1" = 50' HORIZ
1" = 5' VERT

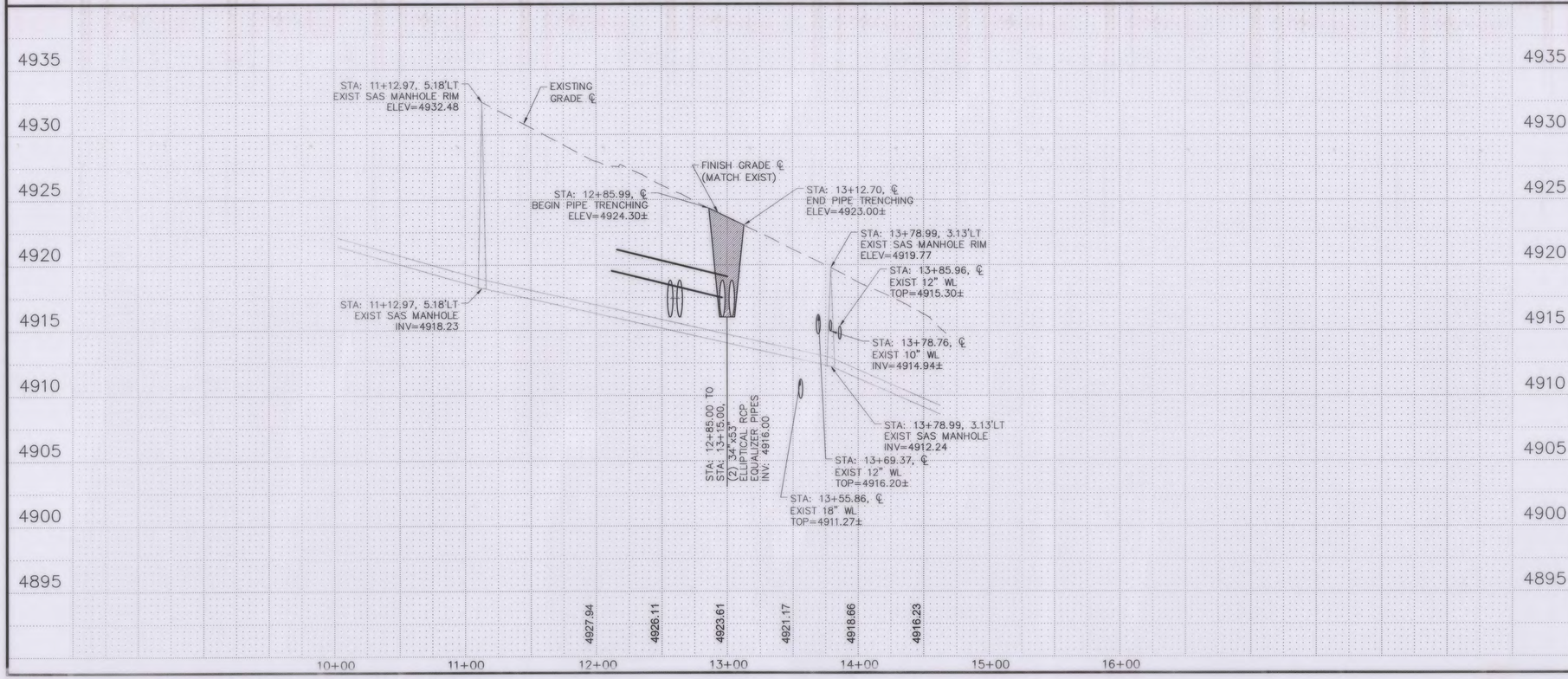

GENERAL NOTES

1 SEE SHEETS 2-4 AND 2-5 FOR POND GRADING.

KEYED NOTES

1 CONSTRUCT ASPHALT PAVEMENT PATCH, CURB & GUTTER, AND SIDEWALK. SEE DETAIL SHEET 2-7.

RECORD DRAWING
DATE 9/06/2016

WILSON & COMPANY
4900 LANG AVE. NE
ALBUQUERQUE, NM 87109
PHONE: 505-348-4000
FAX: 505-348-4055 FIRST FLOOR
FAX: 505-348-4155 SECOND FLOOR
www.wilsonco.com

CONSULTANTS

SEAL

CHRIS A. PEREA
NEW MEXICO
13686
PROFESSIONAL ENGINEER
02/13/2015

PROJECT NAME
CITY OF BELEN
CAMINO DEL LLANO PONDS

REV.	DATE	DESCRIPTION	BY

PROJECT NO:	1160002300
DESIGNED BY:	JEL
DRAWN BY:	JEM
CHECKED BY:	CAP
DATE:	JAN 2015

SHEET TITLE
CAMINO DEL LLANO ROADWAY PLAN & PROFILE

SHEET NO:
3-4

I:\IFS\11-600-023-00\CADD\SHEETS\04 PNP\116023_PNP01.DWG 9/2/2016 3:48 PM

GENERAL TRAFFIC CONTROL NOTES

1. THE CONTRACTOR SHALL CONTACT THE CITY OF BELEN TRAFFIC MANAGER, PRIOR TO THE START OF CONSTRUCTION TO DETERMINE WHICH OF THE EXISTING PERMANENT SIGNS (THAT ARE SLATED TO BE REPLACED) WILL BE SALVAGED BY THE CITY OF BELEN. THE CONTRACTOR WILL BE REQUIRED TO DELIVER THOSE SIGNS TO A LOCATION DETERMINED BY THE VILLAGE OF MILAN PUBLIC WORKS DEPARTMENT. ALL OTHER SIGNS, POSTS AND SIGN BASES WILL BE DISPOSED OF BY THE CONTRACTOR. ANY COSTS ASSOCIATED WITH THIS ACTIVITY SHALL BE CONSIDERED INCIDENTAL TO THE COMPLETION OF THE PROJECT.

2. TRAFFIC CONTROL PLAN: THE CONTRACTOR SHALL BE REQUIRED TO SUBMIT AND OBTAIN APPROVAL OF THE TRAFFIC CONTROL PLAN PRIOR TO COMMENCING ANY CONSTRUCTION ACTIVITIES ON THE PROJECT. THE CONTRACTOR SHALL SUBMIT THE PLAN TO THE PROJECT MANAGER FOR REVIEW AND APPROVAL BY THE CITY OF BELEN TRAFFIC ENGINEER. THE CONTRACTOR WILL BE REQUIRED TO SUBMIT ONE OF THE FOLLOWING:

2.1. THE APPROVED TRAFFIC CONTROL PLANS THAT ARE INCLUDED IN THIS PLAN SET.

2.2. A TRAFFIC CONTROL PLAN THAT WILL REFLECT THE CONTRACTOR'S PROPOSED CONSTRUCTION PHASING. THESE PLANS SHALL BE REVIEWED AND APPROVED BY THE CITY OF BELEN TRAFFIC ENGINEER.

3. THE CITY OF BELEN TRAFFIC SECTION RESERVES THE RIGHT TO MAKE ANY CHANGES TO THE TRAFFIC CONTROL PLAN TO ADDRESS SITE SPECIFIC ITEMS THAT WERE NOT SHOWN ON THE PLANS. THE CITY OF BELEN ALSO RESERVES THE RIGHT TO ADD DEVICES AND/OR SIGNS TO THE APPROVED PLAN IF IT IS DETERMINED BY THE TRAFFIC ENGINEER THAT THE SIGNS AND/OR DEVICES WOULD BE REQUIRED TO ADDRESS SAFETY CONCERNS WITHIN OR IN ADVANCE OF THE WORK ZONE. ANY CHANGES TO THE PLANS WHICH RESULT IN ADDITIONAL SIGNS AND/OR DEVICES WILL BE CONSIDERED INCIDENTAL TO ITEM 702810 – TRAFFIC CONTROL DEVICES FOR CONSTRUCTION.

4. THE TRAFFIC CONTROL PLANS SHALL BE SUBMITTED TO THE CITY OF BELEN AT LEAST 10 WORKING DAYS PRIOR TO THE PRE-CONSTRUCTION MEETING. THE TRAFFIC CONTROL PLANS SHALL BE SUBMITTED ON 11X17 SHEETS. NO HAND DRAFTED TRAFFIC CONTROL PLANS WILL BE ACCEPTED

5. THE TRAFFIC CONTROL PLAN SHALL INCLUDE ALL PHASES OF WORK AND SCHEDULES INVOLVED IN THE CONSTRUCTION PROJECT. ANY SEPARATE PHASES OF A CONSTRUCTION PROJECT SHALL BE GIVEN AN INDIVIDUAL PERMIT EACH. BLANKET PERMITS WILL NOT BE ISSUED.

6. CITY OF BELEN DPW SHALL BE NOTIFIED 5 BUSINESS DAYS PRIOR TO ANY TRAFFIC CONTROL CHANGES NEEDED BY CONTRACTOR, THAT WERE NOT PREVIOUSLY APPROVED. THESE TRAFFIC CONTROL CHANGES SHALL BE REQUESTED IN WRITING ACCOMPANIED WITH A TRAFFIC CONTROL PLAN REFLECTING SUCH CHANGES.

7. THE CONSTRUCTION TRAFFIC CONTROL INITIAL SETUP SHALL BE BY AN AMERICAN TRAFFIC SAFETY SERVICES ASSOCIATION (ATSSA) CERTIFIED WORKSITE TRAFFIC SUPERVISOR. THE MAINTENANCE AND SERVICING SHALL ALSO BE DONE BY AN ATSSA CERTIFIED WORKSITE TRAFFIC SUPERVISOR OR EQUIVALENT.

8. ALL ADVANCE WARNING SIGNS SHALL BE DOUBLE INDICATED WHENEVER THERE ARE MULTI-LANE TRAFFIC IN ANY ONE GIVEN DIRECTION AND THERE IS SUFFICIENT MEDIAN SPACE.

9. CONTRACTOR SHALL NOT BEGIN WORK BEFORE 7:00 A.M. OR END WORK AFTER 7:00 P.M. WITHOUT THE APPROVAL OF THE CITY OF BELEN DPW.

10. CONTRACTOR IS RESPONSIBLE TO PROVIDE THE CITY OF BELEN DPW, A WEEKLY LOG OF DAILY INSPECTIONS OF BARRICADE AND MAINTENANCE SCHEDULES ON PROJECTS THAT ARE OVER ONE WEEK DURATION. NMDOT TRAFFIC CONTROL BOOK LOG.

11. CONTRACTOR SHALL PROVIDE AND MAINTAIN A SAFE AND ADEQUATE MEANS OF CHANNELIZING PEDESTRIAN TRAFFIC AROUND AND THROUGH THE CONSTRUCTION AREA.

12. CONTRACTOR IS RESPONSIBLE FOR OBLITERATION BY WATER BLASTING OF ANY CONFLICTING STRIPING AND RESPONSIBLE FOR ALL TEMPORARY STRIPING (INCIDENTAL TO CONTRACT).

13. CONTRACTOR SHALL PROVIDE ACCESS SIGNS FOR BUSINESSES LOCATED WITHIN THE CONSTRUCTION AREA UNDER THE SUPERVISION OF THE CITY OF BELEN DPW. EACH ACCESS SIGN SHALL HAVE 5 INCH, WHITE OPAQUE LETTERING ON BLUE REFLECTORIZED BACKGROUND. ACCESS SIGNS SHALL BE CONSIDERED INCIDENTAL TO THE BID AND NOT PART OF THE CONTRACT UNLESS OTHERWISE STATED. NO MORE THAN 3 BUSINESSES SHALL BE LISTED ON A ACCESS SIGN. SHOPPING CENTERS AND MALLS SHALL BE LISTED AS SUCH.

14. EXCAVATIONS SHALL BE PLATED, TEMPORARILY PATCHED OR RESURFACED PRIOR TO OPENING OF TRAFFIC. A MINIMUM OF 11 FEET SHALL BE PROVIDED FOR TRAFFIC IN ANY GIVEN DIRECTION. CONTRACTOR IS RESPONSIBLE FOR ANY WORK INVOLVED IN SATISFYING THESE REQUIREMENTS.

15. TRAFFIC CONTROL STANDARDS APPLY ONLY WHERE THE CONSTRUCTION TRAFFIC CONTROL PLANS ARE NOT SPECIFIC.

16. PAVEMENT DROP-OFF SHALL COMPLY WITH THE NMDOT PUBLICATION, "PAVEMENT DROP-OFF GUIDELINES FOR MAINTENANCE AND CONSTRUCTION WORK ZONES." (INCIDENTAL TO CONTRACT)

17. CONTRACTOR SHALL PROVIDE 2 ELECTRONIC VARIABLE MESSAGE SIGNS FOR USE BY THE CONTRACTOR FOR DURATION OF THE PROJECT, MESSAGES TO BE COORDINATED WITH CITY OF BELEN TRAFFIC MANAGER. (INCIDENTAL TO CONTRACT)

18. ANY TEMP PAVEMENT, TEMP TRAFFIC SIGNALS, BARRIER WALL AND ALL OTHER ITEMS NECESSARY FOR ADEQUATE TRAFFIC CONTROL INCLUDED IN TRAFFIC CONTROL BID ITEM.

19. THE CONTRACTOR SHALL PROVIDE A MINIMUM OF 2 LANES OF TRAFFIC, 1 LANE IN EACH DIRECTION, DURING CONSTRUCTION. THE MINIMUM DRIVING LANE WIDTH SHALL BE 11 FEET WITH A 1 FOOT SHOULDER, IF CONCRETE BARRIER IS PLACED ADJACENT TO THE DRIVING LANES, OTHERWISE USE NMDOT DROPOFF GUIDELINES.

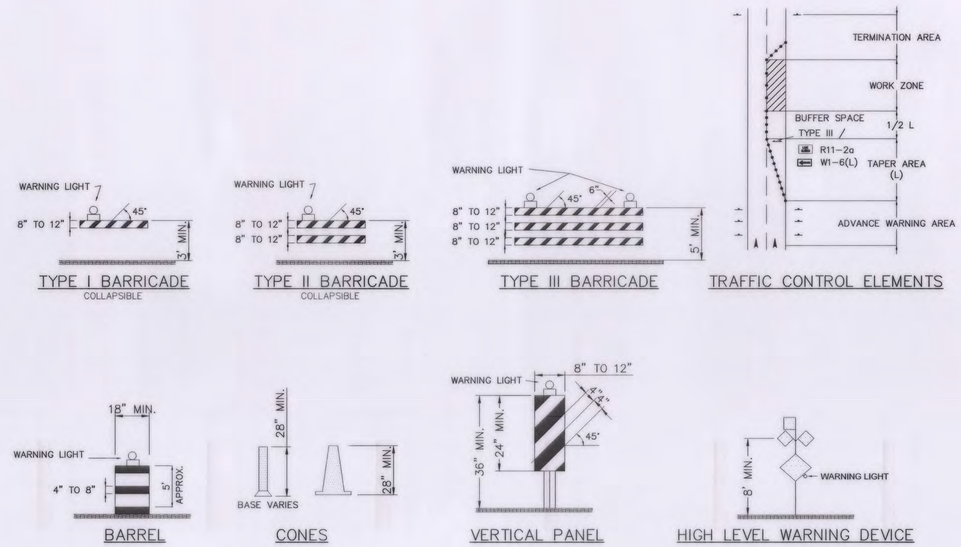

SIGN FACE DETAILS

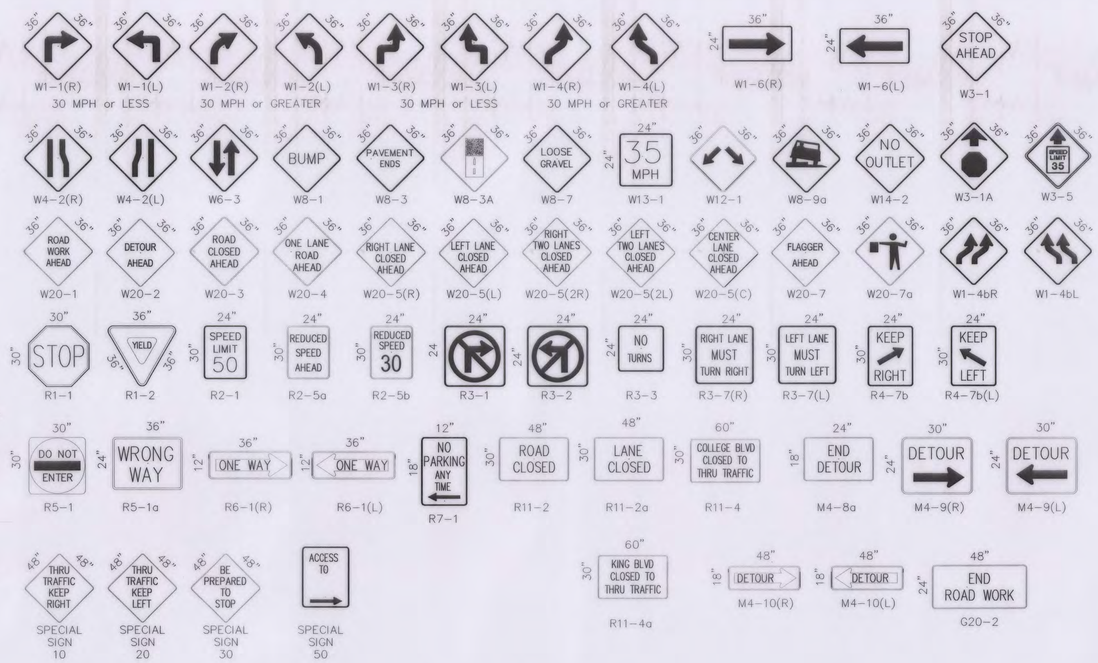

ALL CONSTRUCTION WARNING SIGNS SHALL HAVE A BLACK LEGEND ON A ORANGE BACKGROUND.

LEGEND

- WORK AREA
- BARRICADE – TYPE I, TYPE II, OR BARREL
- BARRICADE – TYPE III
- X VERTICAL PANEL
- WARNING SIGN
- FLAGMAN POSITION
- D DISTANCE BETWEEN SIGNS (A DISTANCE MEASURED IN FEET EQUAL TO A VALUE OF TEN TIMES THE SPEED LIMIT OF THE STREET)
- S SPACING BETWEEN BARRICADES (A DISTANCE MEASURED IN FEET EQUAL TO THE SPEED LIMIT OF THE STREET)
- L TAPER LENGTH (SEE CHART BELOW)
  *THE TANGENT LENGTH IS EQUAL TO THE TAPER LENGTH FOR A GIVEN STREET

TAPER REQUIREMENTS

SPEED LIMIT (MPH)	TAPER LENGTH IN FEET (L)			MINIMUM NUMBER OF DEVICES FOR TAPER	MAXIMUM DEVICE SPACING IN FEET	
	10' LANE	11' LANE	12' LANE		ALONG TAPER	AFTER TAPER
20	70	75	80	5	20	20
25	105	115	125	6	25	25
30	150	165	180	7	30	30
35	205	225	245	8	35	35
40	270	295	320	9	40	40
45	450	495	540	13	45	45
50	500	550	600	13	50	50
55	550	605	660	13	55	55

RECOMMENDED SIGN SPACING(D) FOR ADVANCE WARNING SIGN SERIES

SPEED MILES PER HOUR	MINIMUM DISTANCE IN FEET BETWEEN SIGNS	FROM LAST SIGN TO TAPER
0–20	10 X SPEED LIMIT	10 X SPEED LIMIT
25–30	10 X SPEED LIMIT	10 X SPEED LIMIT
30–35	10 X SPEED LIMIT	10 X SPEED LIMIT
40–45	10 X SPEED LIMIT	10 X SPEED LIMIT
50–60	10 X SPEED LIMIT	10 X SPEED LIMIT

TAPER CRITERIA

TYPE OF TAPER	TAPER LENGTH
UPSTREAM TAPER:	
MERGING TAPER	L MINIMUM
SHIFTING TAPER	1/2 L MINIMUM
SHOULDER TAPER	1/2 L MINIMUM
TWO-WAY TRAFFIC TAPER	100 FEET MAXIMUM
DOWNSTREAM TAPER:	100 FEET PER LANE

TAPER LENGTH COMPUTATION

SPEED LIMIT

40 MPH OR LESS $L = \frac{WS^2}{60}$

45 MPH OR GREATER $L = W \times S$

L = TAPER LENGTH
W = WIDTH OF OFFSET IN FEET
S = POSTED SPEED OR OFF-PEAK 85 PERCENTILE SPEED, IN MPH

RECORD DRAWING
DATE 9/06/2016

WILSON & COMPANY
4900 LANG AVE. NE
ALBUQUERQUE, NM 87109
PHONE: 505-348-4000
FAX: 505-348-4055 FIRST FLOOR
FAX: 505-348-4155 SECOND FLOOR
www.wilsonco.com

SEAL

PROJECT NAME
CITY OF BELEN
CAMINO DEL LLANO PONDS

REV.	DATE	DESCRIPTION	BY

PROJECT NO:	1160002300
DESIGNED BY:	JEL
DRAWN BY:	JEM
CHECKED BY:	CAP
DATE:	JAN 2015

SHEET TITLE
SIGNING AND CONSTRUCTION TRAFFIC CONROL STANDARDS

SHEET NO:
7-1

M:\IFS\11-600-023-00\CADD\SHEETS\07 TRAFFIC\116023_TRFC STANDARDS.DWG 11/12/2014 9:01 AM

E1 TRAFFIC CONTROL PHASE 1

1" = 50'

A1 TRAFFIC CONTROL PHASE 2

1" = 50'

GENERAL NOTES

1. ALL TEMPORARY TRAVEL LANES SHALL BE 4" TYPE I BASE COURSE AND 10' WIDE MINIMUM.

LEGEND

- WORK ZONE
- DIRECTION OF TRAFFIC
- SIGN

WILSON & COMPANY
4900 LANG AVE. NE
ALBUQUERQUE, NM 87109
PHONE: 505-348-4000
FAX: 505-348-4055 FIRST FLOOR
FAX: 505-348-4155 SECOND FLOOR
www.wilsonco.com

SEAL

CHRIS A. PEREA
NEW MEXICO
PROFESSIONAL ENGINEER

PROJECT NAME

CITY OF BELEN
CAMINO DEL LLANO PONDS

REV.	DATE	DESCRIPTION	BY

PROJECT NO:	1160002300
DESIGNED BY:	JEL
DRAWN BY:	JEM
CHECKED BY:	CAP
DATE:	JAN 2015

SHEET TITLE

TEMPORARY TRAFFIC CONTROL PLAN

SHEET NO:

7-2

RECORD DRAWING
DATE 9/06/2016

M:\IFS\11-600-023-00\CADD\SHEETS\07 TRAFFIC\116023_TRFC PHASE.DWG 11/12/2014 9:02 AM

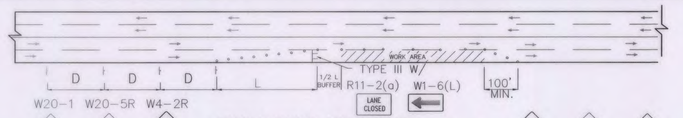

TYPICAL RIGHT LANE CLOSURE

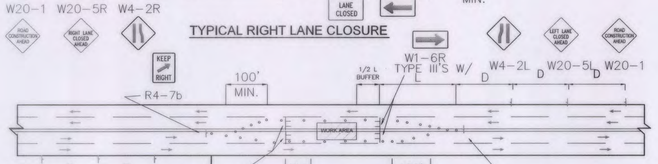

TYPICAL LEFT LANE CLOSURE

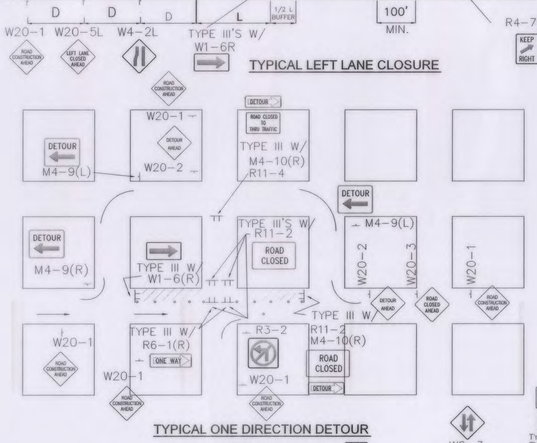

TYPICAL ONE DIRECTION DETOUR

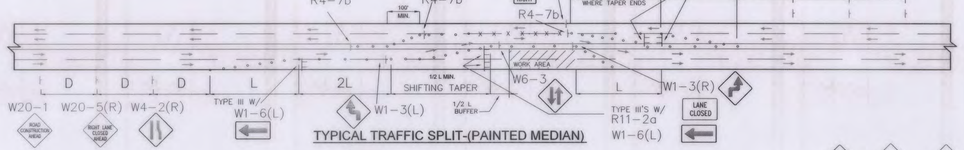

TYPICAL TRAFFIC SPLIT-(PAINTED MEDIAN)

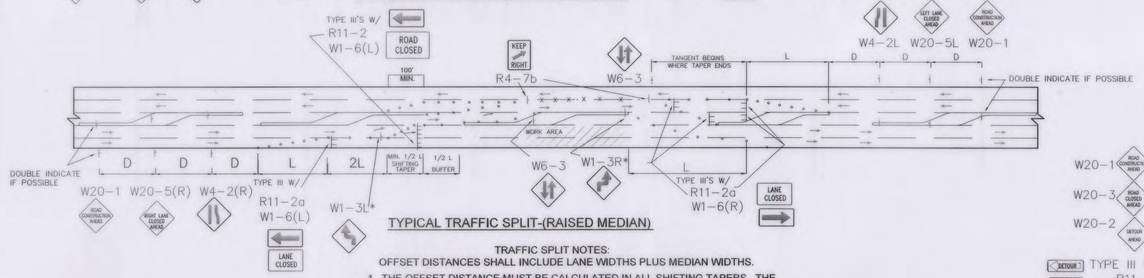

TYPICAL TRAFFIC SPLIT-(RAISED MEDIAN)

TRAFFIC SPLIT NOTES:
OFFSET DISTANCES SHALL INCLUDE LANE WIDTHS PLUS MEDIAN WIDTHS.

1. THE OFFSET DISTANCE MUST BE CALCULATED IN ALL SHIFTING TAPERS. THE
2. 1/2 L IS MINIMUM DISTANCE FOR SHIFTING TAPERS.
3. REVERSE CURVES MAY BE IMPLEMENTED. ALL CURVE DATA SHALL BE CALCULATED.
4. MEDIAN REMOVAL SHALL BE REQUIRED IF 1/2 L OR REVERSE CURVE IS NOT SUFFICIENT. MEDIAN REMOVAL SHALL TAKE PLACE BEFORE SPLITS.
5. REDUCED SPEED MAY BE CONSIDERED.
6. * USE W1-3 FOR 30 MPH OR LESS, W1-4 FOR SPEED 35 MPH OR GREATER.

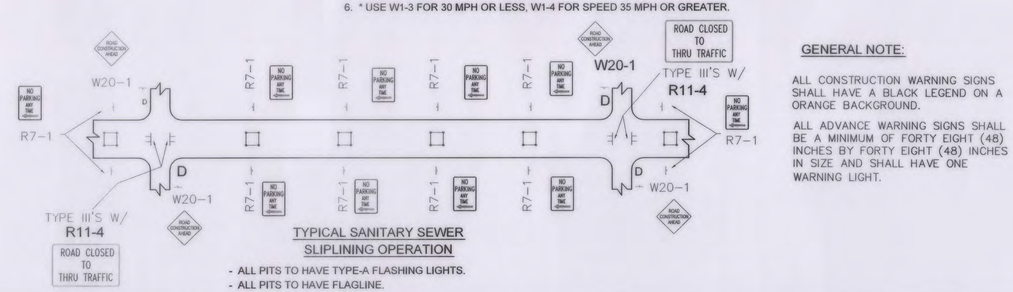

TYPICAL SANITARY SEWER SLIPLINING OPERATION

- ALL PITS TO HAVE TYPE-A FLASHING LIGHTS.
- ALL PITS TO HAVE FLAGLINE.

NOTE:
MAY REQUIRE LEFT LANE CLOSURE DEPENDING ON FIELD CONDITIONS.

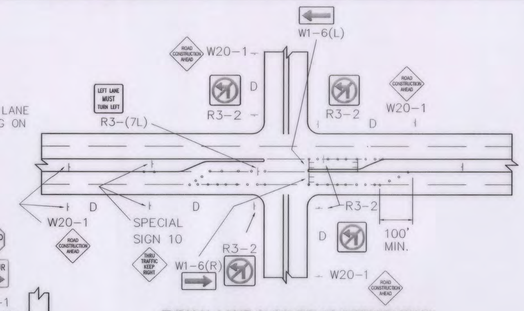

TYPICAL LANE CLOSURE AT INTERSECTION

NOTE: DEPENDING ON WORK ZONE LOCATION

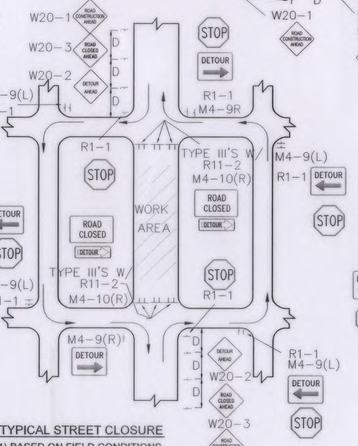

TYPICAL STREET CLOSURE

NOTE: (R1-1) BASED ON FIELD CONDITIONS.

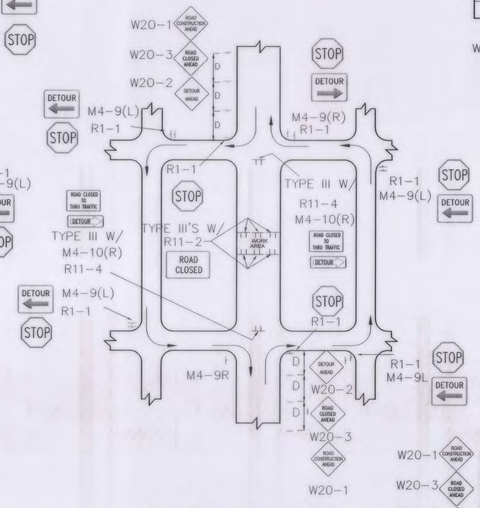

TYPICAL MID-BLOCK CLOSURE

NOTE: (R1-1) BASED ON FIELD CONDITIONS.

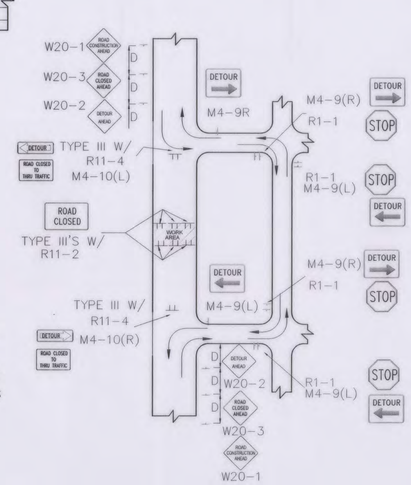

TYPICAL STREET CLOSURE

NOTE: (R1-1) BASED ON FIELD CONDITIONS.

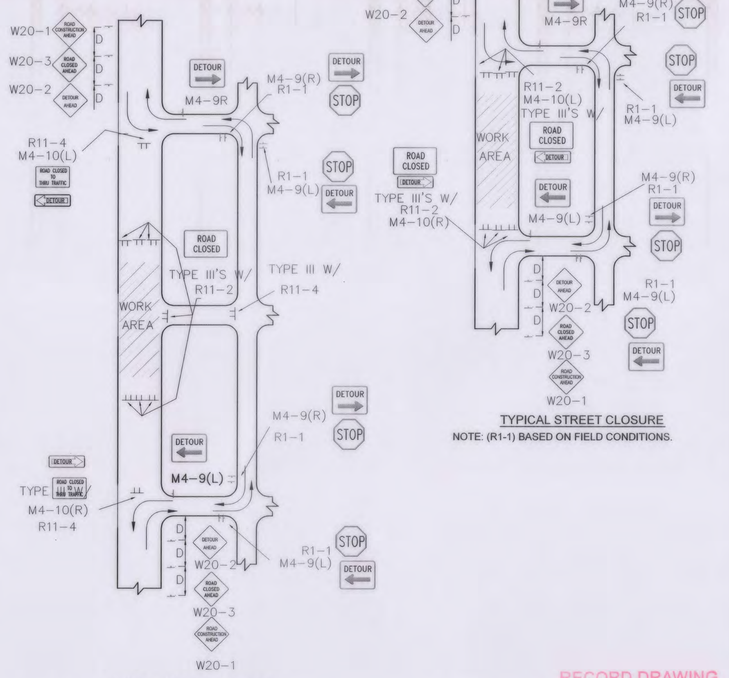

TYPICAL STREET CLOSURE

NOTE: (R1-1) BASED ON FIELD CONDITIONS.

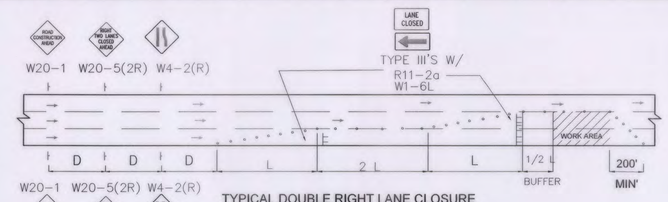

TYPICAL DOUBLE RIGHT LANE CLOSURE

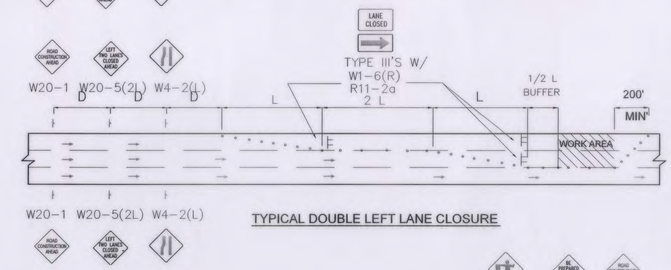

TYPICAL DOUBLE LEFT LANE CLOSURE

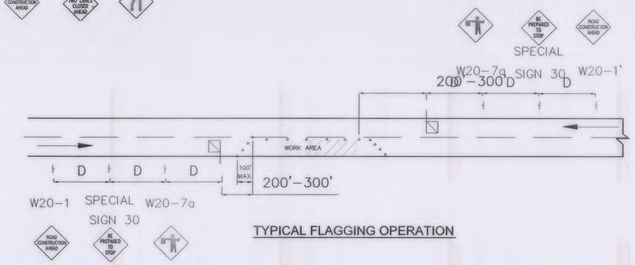

TYPICAL FLAGGING OPERATION

GENERAL NOTE:

ALL CONSTRUCTION WARNING SIGNS SHALL HAVE A BLACK LEGEND ON A ORANGE BACKGROUND.

ALL ADVANCE WARNING SIGNS SHALL BE A MINIMUM OF FORTY EIGHT (48) INCHES BY FORTY EIGHT (48) INCHES IN SIZE AND SHALL HAVE ONE WARNING LIGHT.

RECORD DRAWING
DATE 9/06/2016

WILSON & COMPANY
4900 LANG AVE. NE
ALBUQUERQUE, NM 87109
PHONE: 505-348-4000
FAX: 505-348-4055 FIRST FLOOR
FAX: 505-348-4155 SECOND FLOOR
www.wilsonco.com

CITY OF BELEN
STATE OF NEW MEXICO

SEAL

PROJECT NAME
CITY OF BELEN
CAMINO DEL LLANO PONDS

REV.	DATE	DESCRIPTION	BY

PROJECT NO:	1160002300
DESIGNED BY:	JEL
DRAWN BY:	JEM
CHECKED BY:	CAP
DATE:	JAN 2015

SHEET TITLE
TRAFFIC CONTROL PLAN AND SIGNING EXAMPLES

SHEET NO:
7-3

M:\IFS\11-600-023-00\CADD\SHEETS\07 TRAFFIC\7-3 116023_TRFC EXAMPLES - LAYOUT1.DWG 11/12/2014 9:03 AM

D (IN.)	0.	2.	10.	12.	30.	32.	20.	22.
24	3.0	3.6	3.1	3.5	3.3	4.1	3.5	4.3
30	3.3	4.2	3.5	4.3	3.8	4.7	4.2	5.2
36	3.5	4.8	3.9	4.9	4.3	5.3	4.8	5.9
42	3.8	5.3	4.3	5.4	4.8	5.9	5.3	6.5
48	3.8	5.0	3.9	5.1	4.1	5.3	4.4	5.6
54	4.5	5.8	4.6	5.9	4.8	6.2	5.2	6.6
60	5.0	6.7	5.3	6.9	5.6	7.2	6.0	7.7

CONCRETE QUANTITIES (CU.YDS.)

D (IN.)	T (IN.)	0.	2.	10.	12.	30.	32.	20.	22.
24	8	1'-0"	1'-5"	1'-4"	1'-8"	1'-8"	1'-11"	2'-4"	2'-2"
30	8	1'-0"	1'-5"	1'-4"	1'-8"	1'-8"	1'-11"	2'-4"	2'-2"
36	8	1'-0"	1'-5"	1'-4"	1'-8"	1'-8"	1'-11"	2'-4"	2'-2"
42	8	1'-0"	1'-5"	1'-4"	1'-8"	1'-8"	1'-11"	2'-4"	2'-2"
48	8	1'-0"	1'-5"	1'-4"	1'-8"	1'-8"	1'-11"	2'-4"	2'-2"
54	8	1'-0"	1'-5"	1'-4"	1'-8"	1'-8"	1'-11"	2'-4"	2'-2"
60	8	1'-0"	1'-5"	1'-4"	1'-8"	1'-8"	1'-11"	2'-4"	2'-2"

L

D (IN.)	0.	2.	10.	12.	30.	32.	20.	22.
Φ (°)	E=4:1	E=3:1	E=4:1	E=3:1	E=4:1	E=3:1	E=4:1	E=3:1
0	1'-4"	1'-5"	1'-0"	1'-2"	1'-4"	1'-5"	1'-2"	1'-8"
5	1'-2"	1'-2"	1'-1"	1'-2"	1'-2"	1'-2"	1'-2"	1'-8"
10	1'-2"	1'-2"	1'-1"	1'-2"	1'-2"	1'-2"	1'-2"	1'-8"
15	1'-2"	1'-2"	1'-1"	1'-2"	1'-2"	1'-2"	1'-2"	1'-8"

E

D (IN.)	22.	20.	32.	30.	12.	10.	2.	0.
Φ (°)	E=4:1	E=3:1	E=4:1	E=3:1	E=4:1	E=3:1	E=4:1	E=3:1
0	1'-2"	1'-8"	1'-5"	1'-8"	1'-5"	1'-8"	1'-5"	1'-8"
5	1'-2"	1'-8"	1'-5"	1'-8"	1'-5"	1'-8"	1'-5"	1'-8"
10	1'-2"	1'-8"	1'-5"	1'-8"	1'-5"	1'-8"	1'-5"	1'-8"
15	1'-2"	1'-8"	1'-5"	1'-8"	1'-5"	1'-8"	1'-5"	1'-8"

E

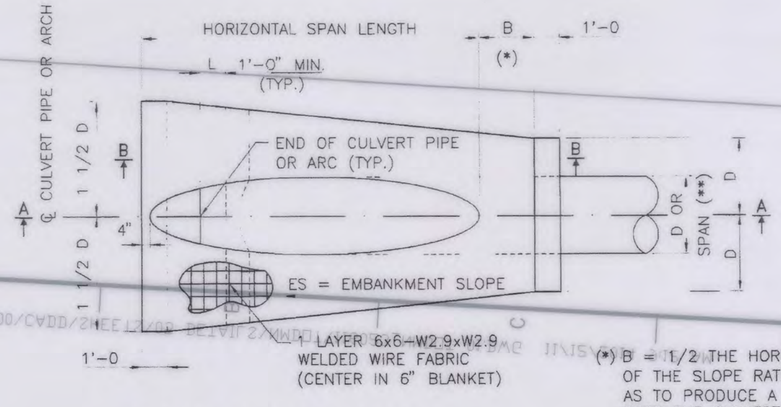

PLAN AT SINGLE PIPE
(NORMAL INSTALLATIONS)

(*) B = 1/2 THE HORIZONTAL COMPONENT OF THE SLOPE RATIO (ES) IN FEET, SO AS TO PRODUCE A 6" MIN. COVER OVER THE CULVERT.

(**) SPAN FOR ARCHED PIPES.

(***) SEE PLAN VIEW FOR NORMAL INSTALLATIONS AND SKEWED INSTALLATIONS.

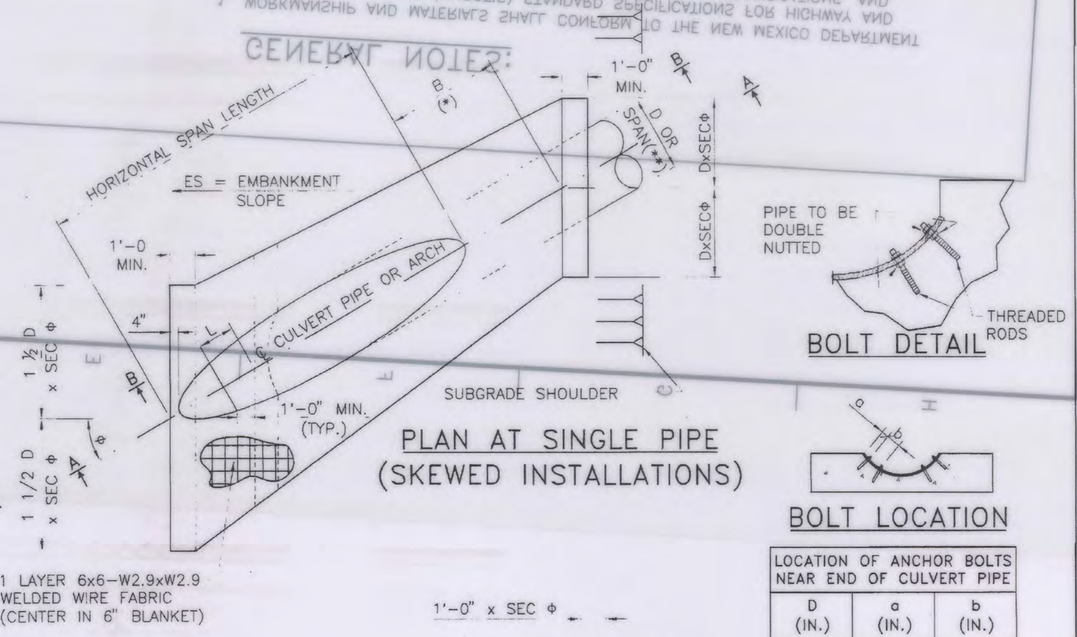

PLAN AT SINGLE PIPE
(SKEWED INSTALLATIONS)

BOLT DETAIL

BOLT LOCATION

LOCATION OF ANCHOR BOLTS NEAR END OF CULVERT PIPE		
D (IN.)	a (IN.)	b (IN.)
24	3	N/A
30	3	8
36	3	8
42	3	8
48	4	12
54	4	12
60	4	12

BOLT LOCATION TABLE

(D IS THE DIAMETER OF CULVERT PIPE OR THE SPAN OF ARCHED PIPE.)

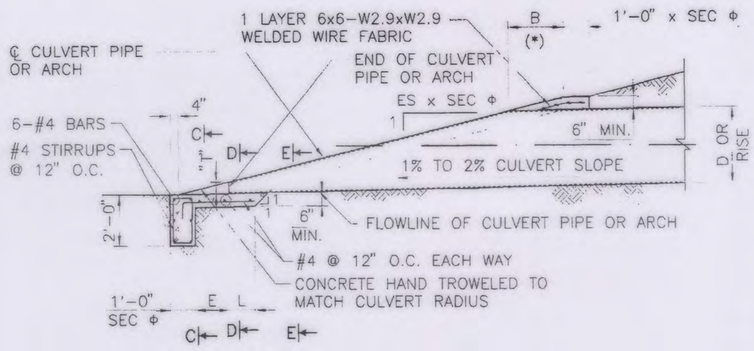

SECTION A-A

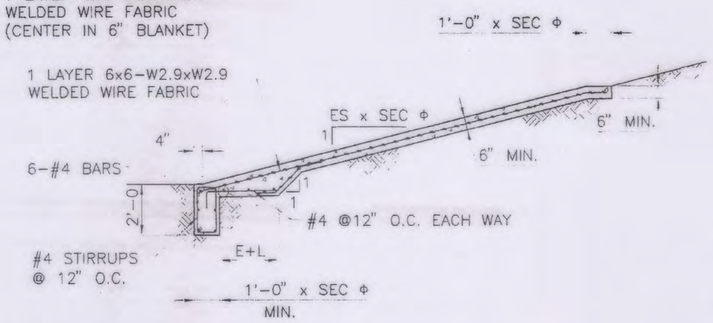

SECTION B-B

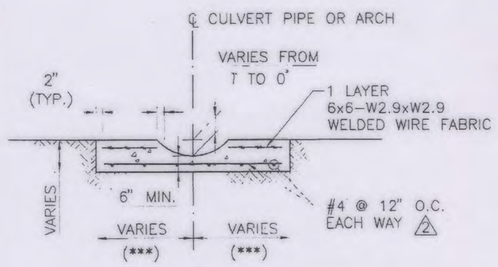

SECTION C-C

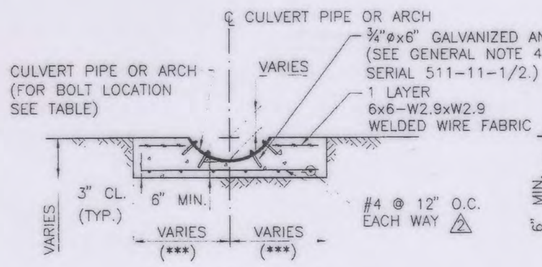

SECTION D-D

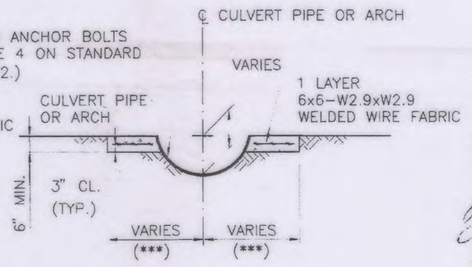

SECTION E-E

	DATE	BY	DESCRIPTION
1	04/12/11	YML	GENERAL REVISIONS

REVISIONS (OR CHANGE NOTICES)

NEW MEXICO
DEPARTMENT OF TRANSPORTATION
STANDARD DRAWING

SINGLE METAL PIPE
CONCRETE BLANKET
WITHOUT SAFETY GRATE
(NORMAL & 5° - 35° SKEW)

DESIGNED BY: FDQ DRAWN BY: SKL CHECKED BY: YML/TM

511-11-2/2 2 of 2

REGISTERED PROFESSIONAL ENGINEER
7-15-11

SHEET NO: 12-1

NMDOT STANDARD DETAILS

SHEET TITLE

DATE: JAN 2015
CHECKED BY: CAP
DRAWN BY: JEM
DESIGNED BY: JEL
PROJECT NO: 116000230

REV.	DATE	DESCRIPTION	BY

PROJECT NAME

CITY OF BELEN
CAMINO DEL LLANO PONDS

NMDOT

CITY OF BELEN THE HUB CITY STATE OF NEW MEXICO

WILSON & COMPANY
4900 LANG AVE. NE
ALBUQUERQUE, NM 87109
PHONE: 505-348-4000
FAX: 505-348-4055 FIRST FLOOR
FAX: 505-348-4155 SECOND FLOOR
www.wilsonco.com

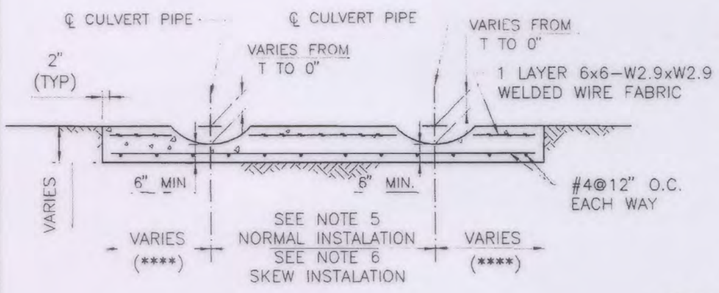

SECTION C-C

(****) SEE PLAN VIEW ON SHEET NO. 511-12A-2/2 FOR NORMAL INSTALLATIONS AND SKEWED INSTALLATION.

LOCATION OF ANCHOR BOLTS NEAR END OF CULVERT PIPE		
D (IN.)	a (IN.)	b (IN.)
24	3	N/A
30	3	8
36	3	8
42	3	8
48	4	12
54	4	12
60	4	12

BOLT LOCATION TABLE

(D IS THE DIAMETER OF CULVERT PIPE OR THE SPAN OF ARCHED PIPE)

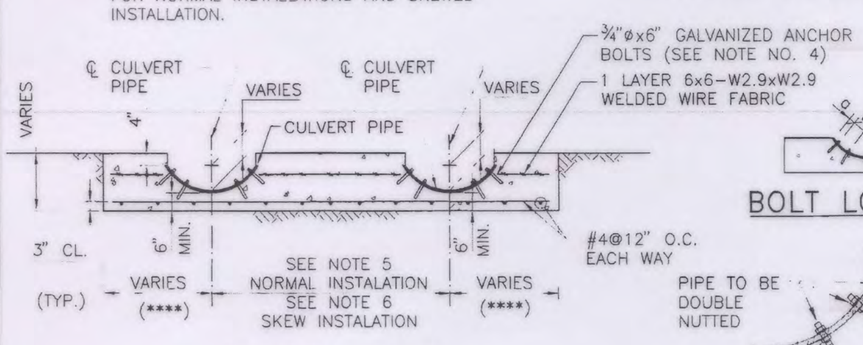

SECTION D-D

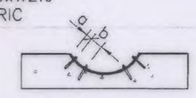

BOLT LOCATION

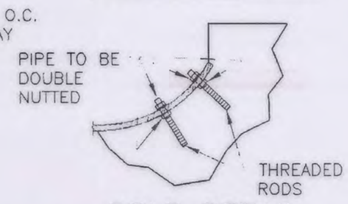

BOLT DETAIL

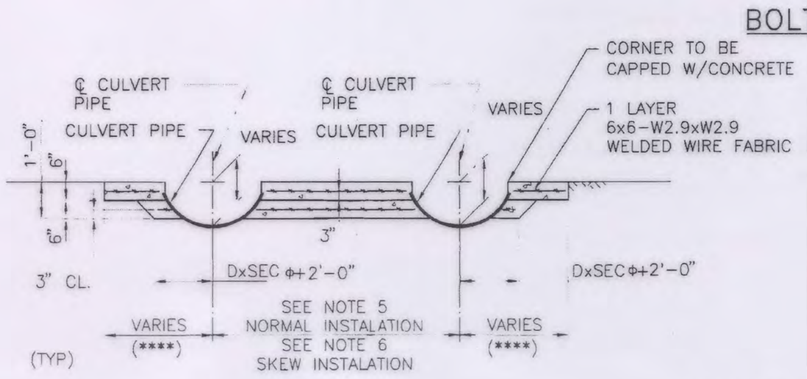

SECTION E-E

(****) SEE PLAN VIEW ON SHEET NO. 511-12A-2/2 FOR NORMAL INSTALLATIONS AND SKEWED INSTALLATIONS

GENERAL NOTES

1. WORKMANSHIP AND MATERIALS SHALL CONFORM TO THE NEW MEXICO DEPARTMENT OF TRANSPORTATION'S (NMDOT'S) STANDARD SPECIFICATIONS FOR HIGHWAY AND BRIDGE CONSTRUCTION CURRENT EDITION, SUPPLEMENTAL SPECIFICATIONS, AND SPECIAL PROVISIONS.
2. CONCRETE SHALL CONFORM TO SECTION 510-PORTLAND CEMENT CONCRETE. CONCRETE IS TO BE CLASS A. CHAMFER ALL EXPOSED EDGES 3/4 INCH UNLESS OTHERWISE NOTED ON THE PLANS.
3. REINFORCING STEEL (REBAR) SHALL CONFORM TO SECTION 540-STEEL REINFORCEMENT AASHTO M 31 (ASTM A 615), GRADE 60. DIMENSIONS REFER TO THE CENTERLINE OF REINFORCING STEEL UNLESS OTHERWISE NOTED ON THE PLANS. WELDED WIRE FABRIC SHALL CONFORM TO SECTION 540 AASHTO M 55 (ASTM A 185) REINFORCE CONCRETE BLANKETS WITH 1 LAYER OF WELDED WIRE FABRIC. PLACE FABRIC IN THE CENTER OF THE CONCRETE BLANKET, AND EXTEND INTO CUT-OFF WALL FULL DEPTH.
4. CULVERT PIPES SHALL BE ANCHORED TO THE BLANKET WITH 3/4" ø X 6" GALVANIZED ALL THREADED RODS. THREADED RODS, NUTS, AND WASHERS SHALL CONFORM TO SECTION 541 OF THE STANDARD SPECIFICATIONS AND TO THE REQUIREMENTS OF AASHTO M 314 (ASTM F 1554) GRADE 36. FOR SPACING AND LOCATION OF THESE ANCHOR BOLTS SEE TABLE BELOW. FURNISHING AND PLACING THESE ANCHOR BOLTS SHALL BE CONSIDERED INCIDENTAL TO CONSTRUCTION
5. PIPE SPACING FOR NEW NORMAL INSTALLATIONS USE D+3'-0". FOR EXTENSIONS OR MODIFICATIONS TO EXISTING CULVERT INSTALLATIONS, MATCH EXISTING CULVERT PIPE SPACING.
6. FOR NEW SKEWED CULVERT INSTALLATIONS, USE (D + 3'-0") X SEC Φ. FOR EXTENSIONS OR MODIFICATIONS TO EXISTING CULVERT INSTALLATIONS MATCH EXISTING CULVERT PIPE SPACING.
7. ES = EMBANKMENT SLOPE. SEE ROADWAY PLANS FOR "ES" WHEN EMBANKMENT SLOPE AT A STRUCTURE DIFFERS FROM THE ORDINARY ROADWAY EMBANKMENT SLOPE, THE CONTRACTOR WILL BE REQUIRED TO TRANSITION SLOPE AS SHOWN ON SERIAL 511-17A-1/2, 511-17A-2/2 "TYPICAL CONCRETE BLANKET DETAILS."
8. FOR T, L, AND E DIMENSIONS SEE TABLES BELOW:

D (IN.)	T (IN.)	L 0°	5°	10°	15°	20°	25°	30°	35°
24	6	1'-0"	1'-2"	1'-4"	1'-6"	1'-6"	1'-9"	1'-11"	2'-2"
30	6	1'-0"	1'-2"	1'-4"	1'-6"	1'-6"	1'-9"	1'-11"	2'-2"
36	6	1'-0"	1'-2"	1'-4"	1'-6"	1'-6"	1'-9"	1'-11"	2'-2"
42	6	1'-0"	1'-2"	1'-4"	1'-6"	1'-6"	1'-9"	1'-11"	2'-2"
48	10	1'-0"	1'-2"	1'-4"	1'-6"	1'-8"	1'-11"	2'-4"	2'-5"
54	15	1'-0"	1'-2"	1'-4"	1'-6"	1'-8"	1'-11"	2'-4"	2'-5"
60	18	1'-0"	1'-2"	1'-4"	1'-6"	1'-8"	1'-11"	2'-4"	2'-5"

Φ (°)	E T = 6" ES=4:1	E T = 6" ES=6:1	E T = 10" ES=4:1	E T = 10" ES=6:1	E T = 15" ES=4:1	E T = 15" ES=6:1	E T = 18" ES=4:1	E T = 18" ES=6:1
0	2'-8"	4'-4"	4'-0"	6'-4"	5'-8"	8'-10"	6'-8"	10'-4"
5	2'-8"	4'-4"	4'-0"	6'-4"	5'-8"	8'-10"	6'-8"	10'-4"
10	2'-8"	4'-4"	4'-0"	6'-4"	5'-8"	8'-10"	6'-8"	10'-4"
15	2'-8"	4'-4"	4'-0"	6'-4"	5'-8"	8'-10"	6'-8"	10'-4"
20	2'-7"	4'-3"	3'-11"	6'-3"	5'-7"	8'-9"	6'-7"	10'-3"
25	2'-7"	4'-3"	3'-11"	6'-3"	5'-7"	8'-9"	6'-7"	10'-3"
30	2-6"	4'-2"	3'-10"	6'-2"	5'-6"	8'-8"	6'-6"	10'-2"
35	2'-5"	4'-1"	3'-9"	6'-1"	5'-5"	8'-7"	6'-5"	10'-1"

9. FOR VOLUME OF CONCRETE FOR DOUBLE PIPE CONCRETE BLANKETS, SEE TABLE BELOW. WEIGHT OF REINFORCING BARS, WELDED WIRE MESH, AND ANCHOR BOLTS SHALL BE CONSIDERED INCIDENTAL TO CONSTRUCTION.

D (IN.)	CONCRETE QUANTITIES (CU. YDS.) 0° ES:1 4	0° ES:1 6	5° ES:1 4	5° ES:1 6	10° ES:1 4	10° ES:1 6	15° ES:1 4	15° ES:1 6	20° ES:1 4	20° ES:1 6	25° ES:1 4	25° ES:1 6	30° ES:1 4	30° ES:1 6	35° ES:1 4	35° ES:1 6
24	5.4	6.8	5.7	6.8	5.7	7.1	6.2	7.6	6.4	7.8	7.2	8.6	8.0	9.7	9.0	11.0
30	7.0	9.0	7.0	9.0	7.2	9.3	7.7	10.0	8.5	10.5	9.3	11.3	10.3	13.0	12.0	14.8
36	8.7	11.3	8.9	11.8	9.4	12.0	9.7	12.7	10.9	13.5	11.4	15.4	13.3	17.1	15.0	19.2
42	10.4	13.6	10.6	13.8	11.3	14.6	12.1	15.5	13.2	16.7	14.2	18.6	15.8	20.8	18.4	23.6
48	14.2	18.3	14.7	18.8	15.4	19.5	16.5	20.4	17.9	22.3	19.8	24.6	22.3	27.5	25.4	31.4
54	20.2	26.5	20.7	27.0	21.6	28.3	23.4	30.2	25.2	32.4	27.9	36.1	31.3	40.7	36.3	46.6
60	26.0	34.1	27.6	35.2	29.2	31.2	36.6	39.3	33.9	42.2	37.5	46.7	42.7	53.1	48.8	60.5

10. TO DETERMINE THE VOLUME OF CONCRETE (CU. YDS.) FOR INSTALLATION OF 3 OR MORE PIPES, USE THE FOLLOWING FORMULA: $VOLUME_{(>2)} = V_2 + (V_2 - V_1) \times (N - 2)$

WHERE:
V_1 = VOLUME OF CONCRETE FOR SINGLE PIPE INSTALLATION (CU. YDS.) (SEE SERIAL DRAWINGS SHEET 511-11A-1/2)
V_2 = VOLUME OF CONCRETE FOR DOUBLE PIPE INSTALLATION (CU. YDS.) (SEE SERIAL DRAWINGS SHEET 511-12A-1/2)
N = NUMBER OF PIPES WHICH MUST BE GREATER THAN 2.

TIMOTHY A. MARTINEZ NEW MEXICO 14072 REGISTERED PROFESSIONAL ENGINEER
7-15-11

	DATE	BY	DESCRIPTION
1	04/12/11	YML	GENERAL REVISIONS

REVISIONS (OR CHANGE NOTICES)

NEW MEXICO DEPARTMENT OF TRANSPORTATION STANDARD DRAWING

MULTIPLE HDPE PIPE CONCRETE BLANKET WITHOUT SAFETY GRATE (NORMAL & 5° - 35° SKEW)

DESIGNED BY: FDQ DRAWN BY: SKL CHECKED BY: YML/TM

511-12A-1/2 1 of 2

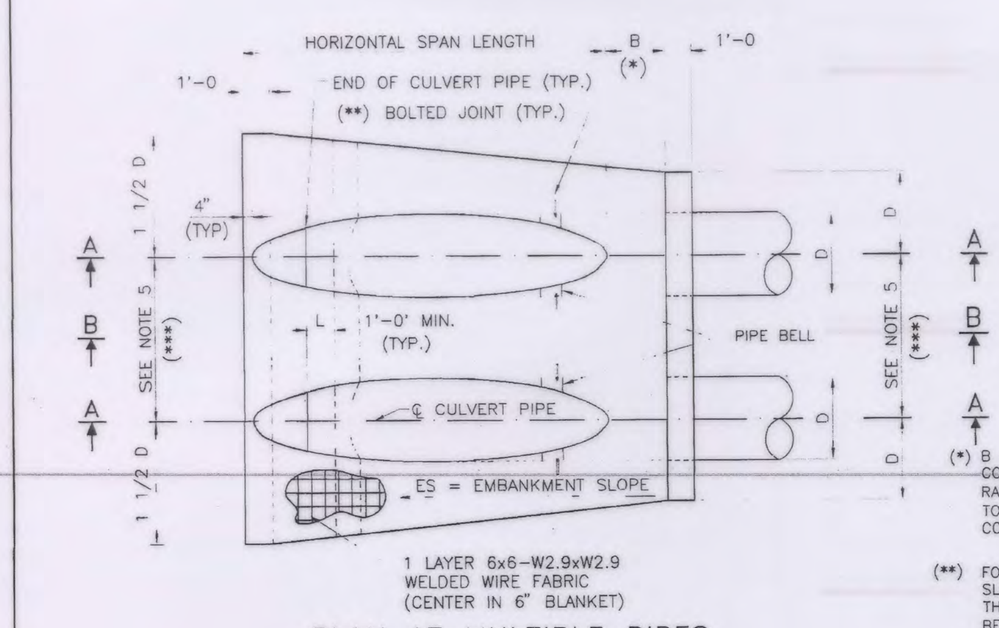

PLAN AT MULTIPLE PIPES (NORMAL INSTALLATIONS)

(*) B = 1/3 THE HORIZONTAL COMPONENT OF THE SLOPE RATIO (ES) IN FEET, SO AS TO PRODUCE A 6" MIN. COVER OVER THE CULVERT.

(**) FOR 42", 48", 54" AND 60" 6:1 SLOPES, THE MITRE SHALL PASS THROUGH THE JOINT. JOINT IS TO BE BOLTED WITH 3/4"ø GALVANIZED ANCHOR BOLTS WITH 3"ø WASHERS.

(***) SEE GENERAL NOTES ON SHEET 511-12A-1/2.

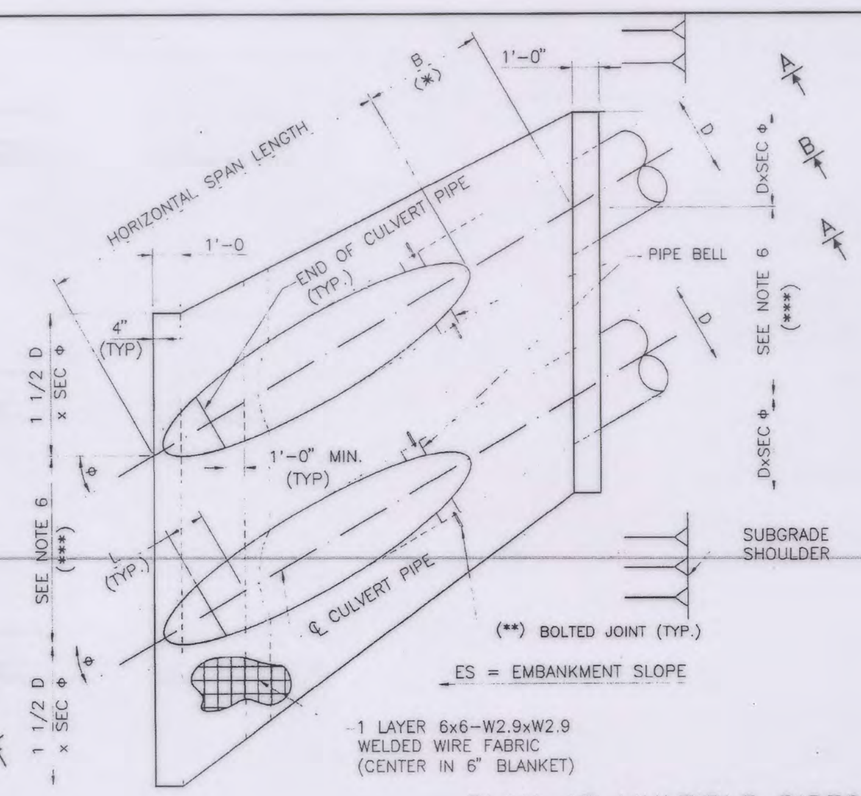

PLAN AT MULTIPLE PIPES (SKEWED INSTALLATIONS)

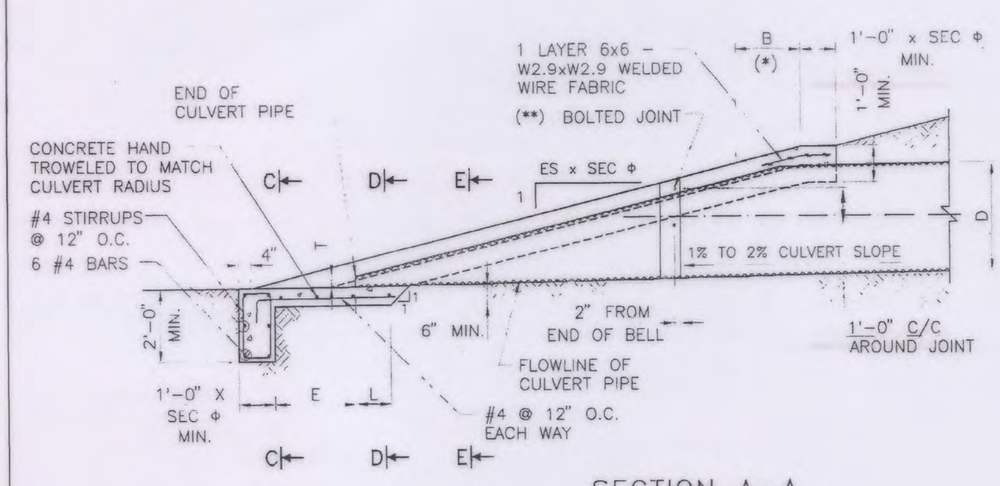

SECTION A-A

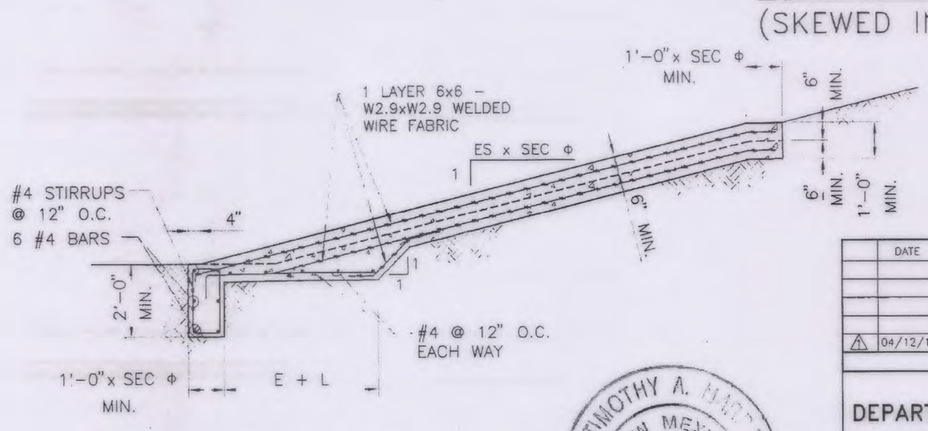

SECTION B-B

TIMOTHY A. MARTINEZ NEW MEXICO 14072 REGISTERED PROFESSIONAL ENGINEER
7-15-11

	DATE	BY	DESCRIPTION
1	04/12/11	YML	GENERAL REVISIONS

REVISIONS (OR CHANGE NOTICES)

NEW MEXICO DEPARTMENT OF TRANSPORTATION STANDARD DRAWING

MULTIPLE HDPE PIPE CONCRETE BLANKET WITHOUT SAFETY GRATE (NORMAL & 5° - 35° SKEW)

DESIGNED BY: FDQ DRAWN BY: SKL CHECKED BY: YML/TM

511-12A-2/2 2 of 2

SHEET NO: 12-2

SHEET TITLE: NMDOT STANDARD DETAILS

DATE: JAN 2015 | CHECKED BY: CAP | DRAWN BY: JEM | DESIGNED BY: JEL | PROJECT NO: 116002300

REV.	DATE	DESCRIPTION	BY

PROJECT NAME: CITY OF BELEN CAMINO DEL LLANO PONDS

NMDOT

CITY OF BELEN THE HUB CITY STATE OF NEW MEXICO

WILSON & COMPANY
4900 LANG AVE. NE
ALBUQUERQUE, NM 87109
PHONE: 505-348-4000
FAX: 505-348-4055 FIRST FLOOR
FAX: 505-348-4155 SECOND FLOOR
www.wilsonco.com

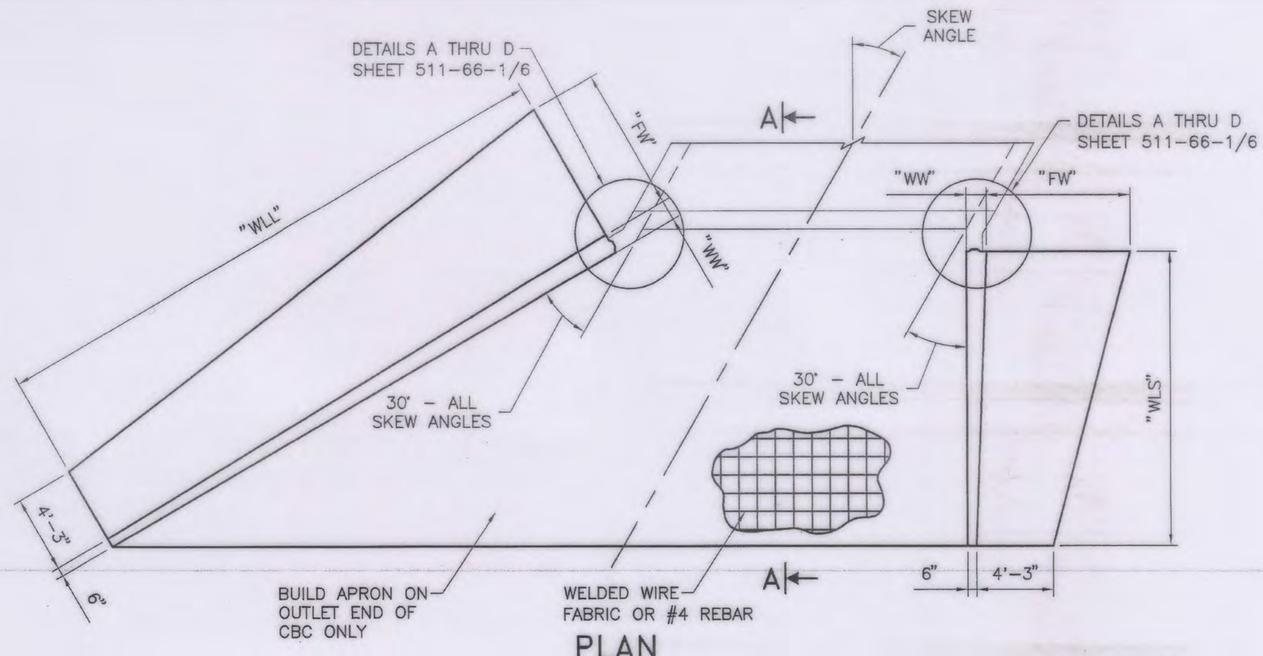

PLAN

SIMILAR ALL SKEWS

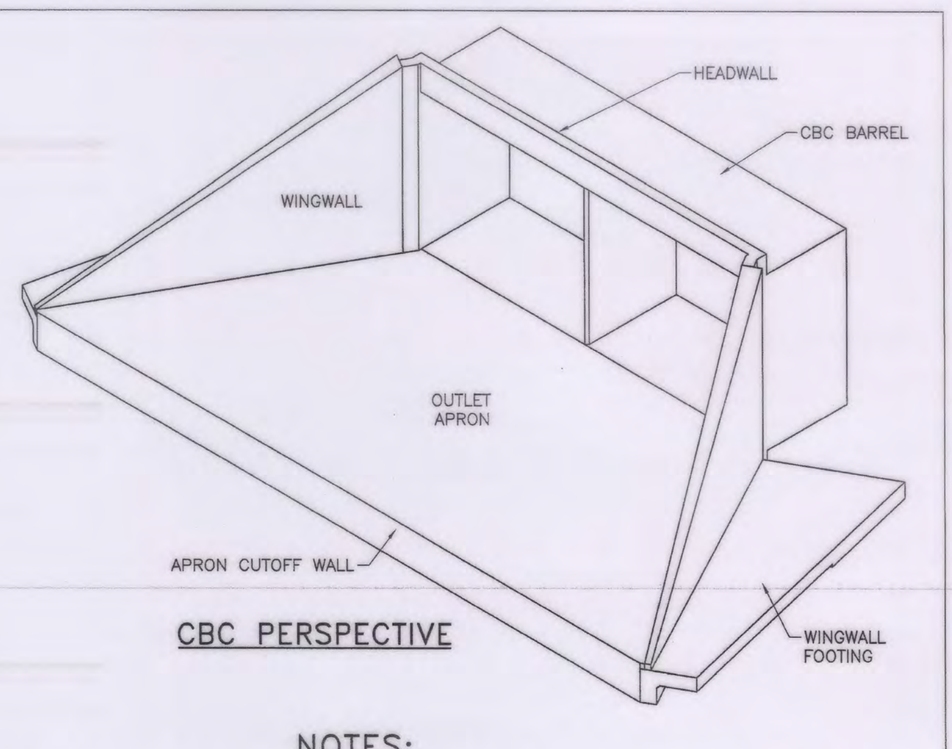

CBC PERSPECTIVE

REINFORCING BARS

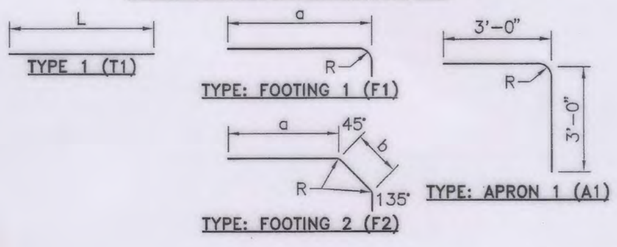

CONTRACTOR IS RESPONSIBLE FOR DETERMINING ALL BAR LENGTHS DIMENSIONS FOR THE WINGWALL REINFORCEMENT IN ACCORDANCE WITH TABLE ON DRAWINGS 511-67-1/2 AND 511-67-2/2.

NOTES:

1. WORKMANSHIP AND MATERIALS SHALL CONFORM TO NEW MEXICO DEPARTMENT OF TRANSPORTATION'S STANDARD SPECIFICATIONS FOR HIGHWAY AND BRIDGE CONSTRUCTION, CURRENT EDITION, AND APPLICABLE SUPPLEMENTAL SPECIFICATIONS AND SPECIAL PROVISIONS.
2. CONCRETE SHALL BE CLASS AA. CHAMFER ALL EDGES OF CONCRETE ¾".
3. REINFORCING BARS SHALL CONFORM TO REQUIREMENTS OF AASHTO M 31. REINFORCING BARS SHALL BE GRADE 60. DIMENSIONS SHOWN REFER TO CENTER LINES OF BARS UNLESS NOTED OTHERWISE.
4. MINIMUM SPLICE LENGTH SHALL BE 2'-0" ON ALL #4 BARS, AND 2'-6" ON ALL #5 BARS. LONGITUDINAL SPLICES SHOULD BE STAGGERED BY A MINIMUM OF TWO TIMES THE SPLICES LENGTH IN ADJACENT BARS. NO SPLICES SHALL BE ALLOWED IN VERTICAL BARS EXCEPT AS SHOWN ON THE DRAWINGS. SPLICES SHALL NOT BE ALLOWED IN TRANSVERSE DIRECTION.

R SHALL BE 1¾" FOR #4 BARS AND 2¼" FOR #5 BARS.

WINGWALL DIMENSIONS

WINGS A AND B			0° SKEW		15° SKEW		30° SKEW		45° SKEW	
"H"	"WW"	"FW"	"WLL"	"WLS"	"WLL"	"WLS"	"WLL"	"WLS"	"WLL"	"WLS"
2'-0"	0'-9½"	6'-8½"	8'-5"	8'-5"	10'-3"	7'-6"	14'-6"	7'-3"	28'-0"	7'-6"
3'-0"	0'-10¼"	7'-2½"	10'-1"	10'-1"	12'-5"	9'-1"	17'-6"	8'-9"	33'-10"	9'-1"
4'-0"	0'-11½"	7'-8½"	11'-10"	11'-10"	14'-6"	10'-8"	20'-6"	10'-3"	39'-8"	10'-8"
5'-0"	1'-0"	8'-2½"	13'-7"	13'-7"	16'-8"	12'-2"	23-'6"	11'-9"	45'-5"	12'-2"
6'-0"	1'-0¾"	8'-9"	15'-4"	15'-4"	18'-9"	13'-9"	26'-6"	13'-3"	51'-3"	13'-9"
7'-0"	1'-1½"	9'-3"	17'-1"	17'-1"	20'-11"	15'-3"	29'-6"	14'-9"	57'-0"	15'-3"
8'-0"	1'-2¼"	9'-9"	18'-9"	18'-9"	23'-0"	16'-10"	32'-6"	16'-3"	62'-10"	16'-10"
9'-0"	1'-3¼"	10'-3"	20'-6"	20'-6"	25'-1"	18'-5"	35'-6"	17'-9"	68'-7"	18'-5"
10'-0"	1'-4"	10'-9"	22'-3"	22'-3"	27'-3"	19'-11"	38'-6"	19'-3"	74'-5"	19'-11"
11'-0"	1'-4¾"	11'-3"	24'-0"	24'-0"	29'-4"	21'-6"	41'-6"	20'-9"	80'-2"	21'-6"
12'-0"	1'-5½"	11'-9"	25'-9"	25'-9"	31'-6"	23'-1"	44'-6"	22'-3"	86'-0"	23'-1"
13'-0"	1'-6¼"	12'-3"	27'-5"	27'-5"	33'-7"	24'-7"	47'-6"	23'-9"	91'-9"	24'-7"
14'-0"	1'-7"	12'-9"	29'-2"	29'-2"	35'-9"	26'-2"	50'-6"	25'-3"	97'-7"	26'-2"

NOTE: TABLE DIMENSIONS SHOWN ARE FOR SLOPES OF 1.5 TO 1. FOR OTHER SLOPES MULTIPLY TABLE VALUES OF "WLS" AND "WLS" BY (SLOPE/1.5).

NO.	DATE	REV. BY	DESCRIPTION

REVISIONS (OR CHANGE NOTICES)

NEW MEXICO
DEPARTMENT OF TRANSPORTATION
STANDARD DRAWING

CONCRETE BOX CULVERT
WINGWALL & OUTLET APRON ALL SKEWS
PLAN, PERSPECTIVE & DIMENSIONS

APPROVED _____ DESIGN ENGINEER APR 9, 07 DATE

DESIGNED BY TLB DRAWN BY SGL CHECKED BY HDR

511-67-1/2 1 OF 2

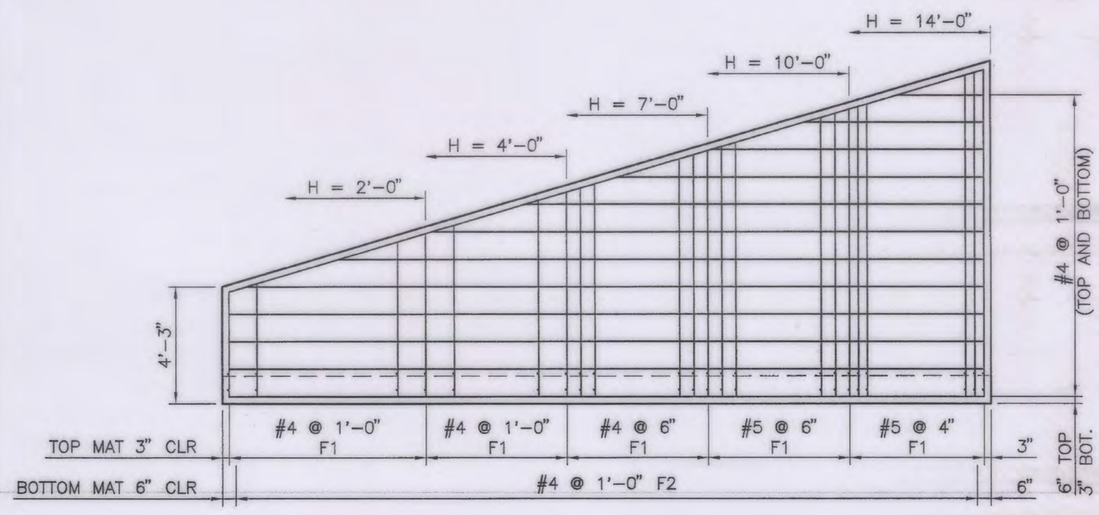

FOOTING PLAN

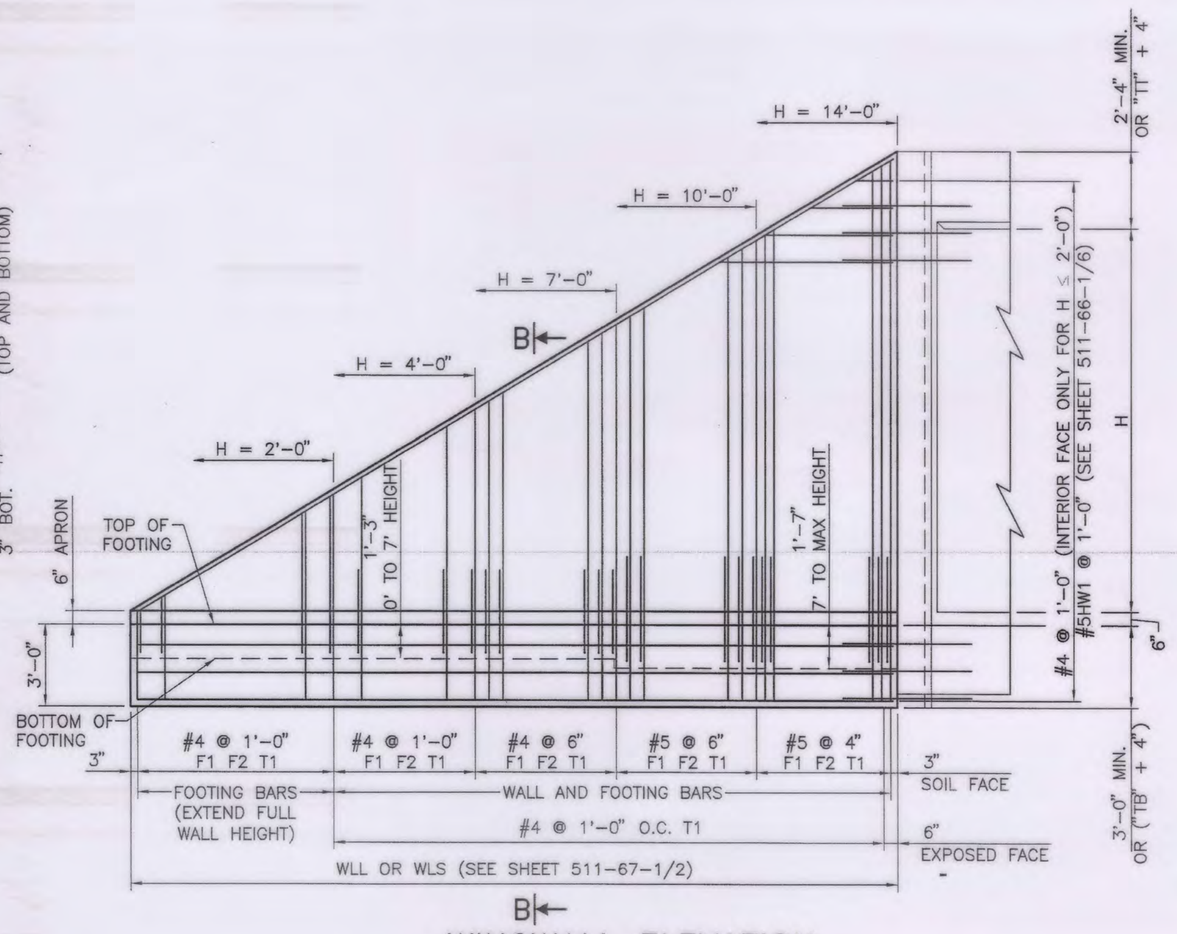

WINGWALL ELEVATION

CONTRACTOR IS RESPONSIBLE FOR DETERMINING ALL BAR LENGHT DIMENSIONS FOR THE WINGWALL REINFORCEMENT IN ACCORDANCE WITH DRAWINGS 511-67-1/2 AND 511-67-2/2.

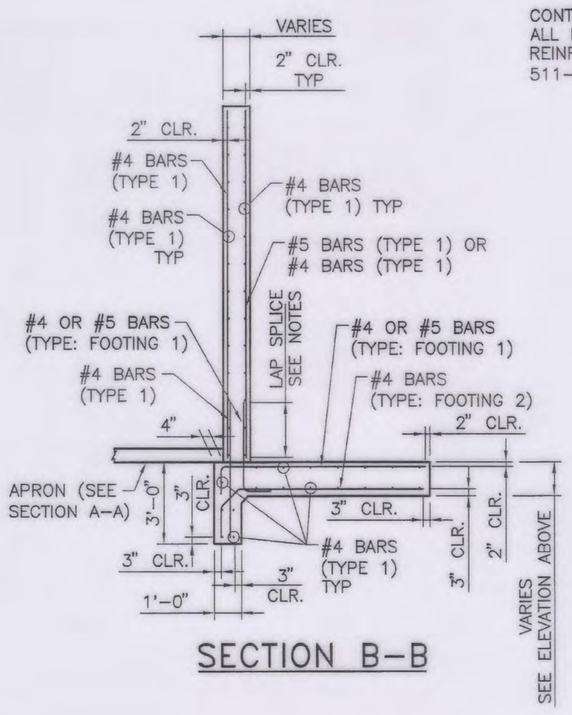

SECTION B-B

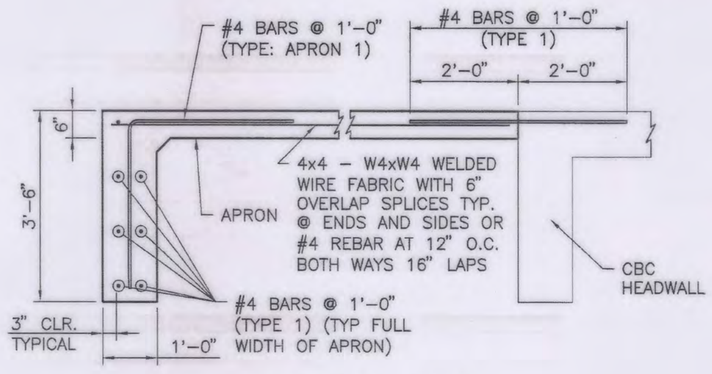

SECTION A-A

NO.	DATE	REV. BY	DESCRIPTION

REVISIONS (OR CHANGE NOTICES)

NEW MEXICO
DEPARTMENT OF TRANSPORTATION
STANDARD DRAWING

CONCRETE BOX CULVERT
WINGWALL & OUTLET APRON ALL SKEWS
STRUCTURAL SECTIONS AND REBAR

APPROVED _____ DESIGN ENGINEER APR 9, 07 DATE

DESIGNED BY JB DRAWN BY SGL CHECKED BY HDR

511-67-2/2 2 OF 2

SHEET NO: 12-3

SHEET TITLE: NMDOT STANDARD DETAILS

DATE: JAN 2015
CHECKED BY: CAP
DRAWN BY: JEM
DESIGNED BY: JEL
PROJECT NO: 116002300

REV.	DATE	DESCRIPTION	BY

PROJECT NAME

CITY OF BELEN
CAMINO DEL LLANO PONDS

NMDOT

CITY OF BELEN THE HUB CITY STATE OF NEW MEXICO

WILSON & COMPANY
4900 LANG AVE. NE
ALBUQUERQUE, NM 87109
PHONE: 505-348-4000
FAX: 505-348-4055 FIRST FLOOR
FAX: 505-348-4155 SECOND FLOOR
www.wilsonco.com

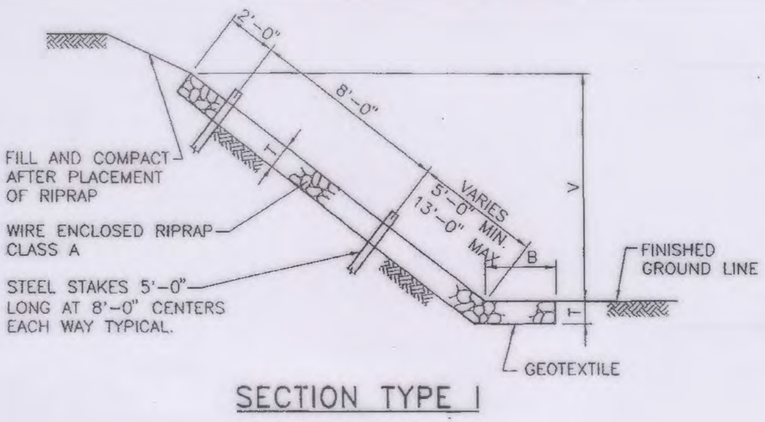

SECTION TYPE I

QUANTITIES PER LINEAR FOOT	
SLOPE	RIPRAP (CU. YDS.)
1.5 : 1	$\frac{T}{27}(B + 1.803\ V + 0.303\ T)$
1.75 : 1	$\frac{T}{27}(B + 2.016\ V + 0.266\ T)$
2 : 1	$\frac{T}{27}(B + 2.236\ V + 0.236\ T)$
3 : 1	$\frac{T}{27}(B + 3.162\ V + 0.162\ T)$
4 : 1	$\frac{T}{27}(B + 4.123\ V + 0.123\ T)$

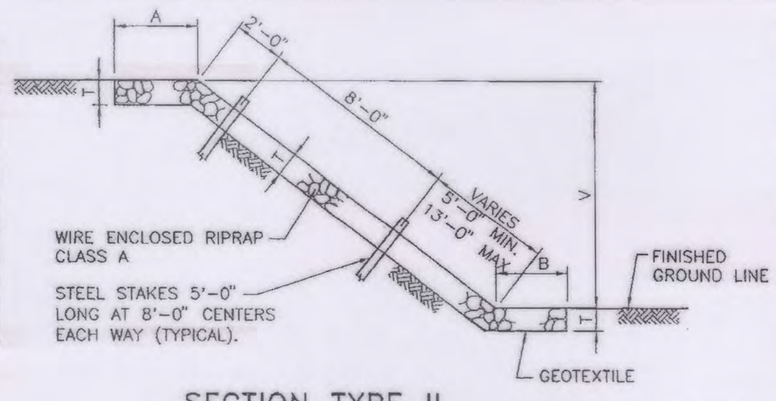

SECTION TYPE II

QUANTITIES PER LINEAR FOOT	
SLOPE	RIPRAP (CU. YDS.)
1 : 1	$\frac{T}{27}(A + B + 1.414V)$
1.5 : 1	$\frac{T}{27}(A + B + 1.803V)$
1.75 : 1	$\frac{T}{27}(A + B + 2.016V)$
2 : 1	$\frac{T}{27}(A + B + 2.236V)$
3 : 1	$\frac{T}{27}(A + B + 3.162V)$
4 : 1	$\frac{T}{27}(A + B + 4.123V)$

GENERAL NOTES

1. WIRE FABRIC FOR RIP RAP SHALL BE "W" OR HEXAGONAL MESH AND MEET THE REQUIREMENTS LISTED IN SECTION 602 OF THE NMDOT STANDARD SPECIFICATIONS FOR HIGHWAY AND BRIDGE CONSTRUCTON, CURRENT EDITION.
2. STEEL STAKES MAY BE RAILROAD RAILS WEIGHING NOT LESS THAN 30 LBS. PER YARD, 4" NOMINAL DIAMETER STANDARD STRENGTH GALVANIZED STEEL PIPE, OR L 4" x 4"x 3/8" STEEL ANGLES. STEEL STAKES SHALL PROJECT 6" ABOVE TOP OF RIPRAP. STEEL STAKES ARE CONSIDERED INCIDENTAL TO THE COMPLETION OF THE WORK AND NO DIRECT MEASUREMENT OR PAYMENT WILL BE MADE THEREFORE.
3. IF LENGTH OF SLOPE IS 15 FEET OR LESS, ONLY ONE ROW OF STEEL STAKES 2 FEET FROM THE TOP EDGE OF RIPRAP WILL BE REQUIRED UNLESS OTHERWISE NOTED ON PLANS.
4. FOR DIMENSIONS A, B, V, & T. SEE BRIDGE OR ROADWAY PLANS.
5. T=12" UNLESS OTHERWISE SHOWN ON PLANS; T=18" AT BRIDGES.
6. FASTENERS FOR SPLICES AND/OR SELVEDGE END CONNECTORS MAY BE WIRE TIES, INTERLOCKING WIRE CLIPS, HOG RINGS, OR LACING WIRE. ONLY FASTENERS WHICH APPEAR ON THE DEPARTMENT'S "APPROVED PRODUCTS LIST" MAY BE USED.
7. LACING SHALL BE CONTINUOUS AS FAR AS IS PRACTICAL AND SHALL PASS THROUGH EACH MESH OPENING.
8. WHERE SPLICING IS NECESSARY, AN OVERLAP OF LACING OF AT LEAST 1 FOOT SHALL BE PROVIDED.

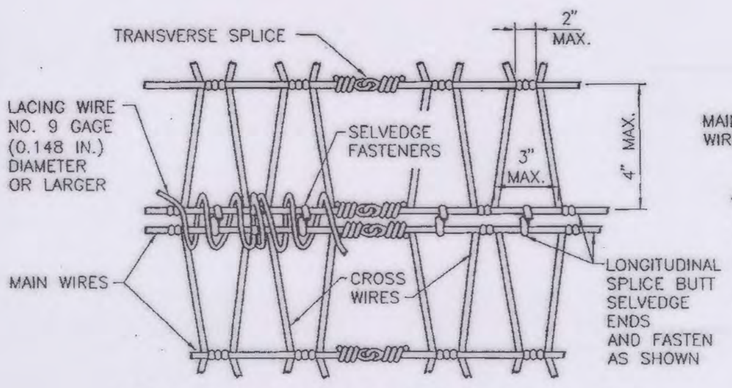

NORMAL INTERSECTION SPLICES

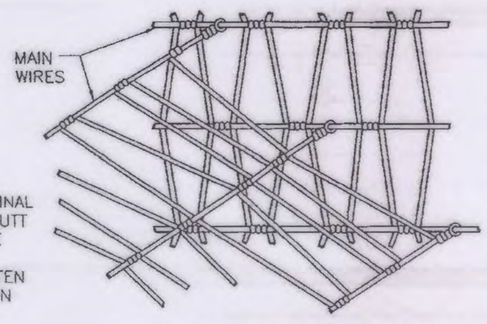

SKEWED INTERSECTION SPLICE

"W" MESH

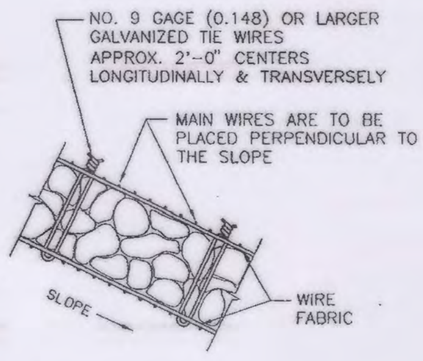

TYPICAL SECTION

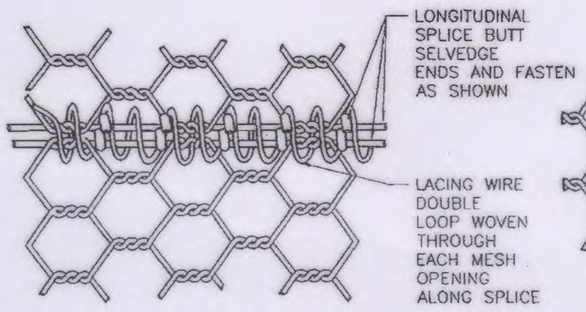

NORMAL INTERSECTION SPLICE

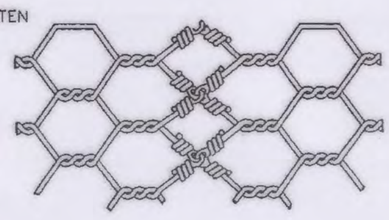

TRANSVERSE SPLICE

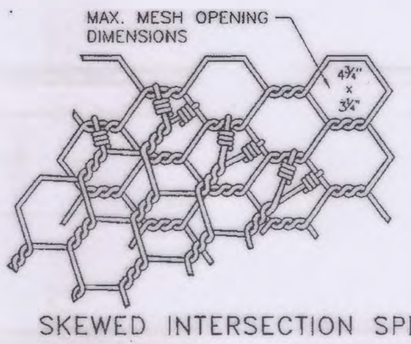

SKEWED INTERSECTION SPLICE

HEXAGONAL MESH

NO.	DATE	REV.BY	DESCRIPTION

REVISIONS (OR CHANGE NOTICES)

NEW MEXICO DEPARTMENT OF TRANSPORTATION STANDARD DRAWING

WIRE ENCLOSE RIPRAP CLASS "A"

DESIGNED BY ____ DRAWN BY SKL CHECKED BY YML

602-01-1/1 1 of 1

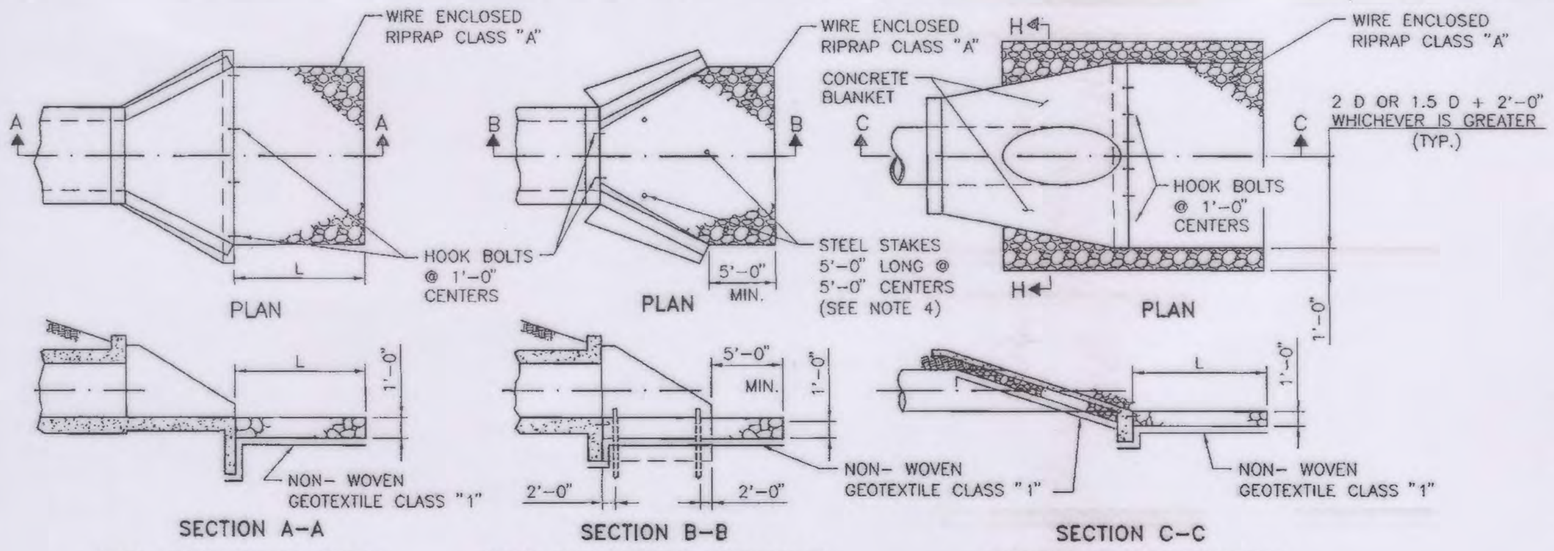

BOX CULVERTS WITH APRONS

BOX CULVERTS WITHOUT APRONS

CONCRETE BLANKETS

GENERAL NOTES

1. ALL RIPRAP SHALL BE CLASS "A" UNLESS SPECIFIED OTHERWISE IN THE PLANS. DIMENSIONS OF RIPRAP CLASS "A" SHALL BE VERIFIED IN FIELD.
2. RIPRAP ON THIS STANDARD IS SHOWN FOR SINGLE PIPES AND CULVERTS ONLY. FOR MULTIPLE PIPE AND CULVERT INSTALLATIONS, EXTEND RIPRAP BEYOND OUTLET OPENING AS SHOWN IN PLAN DETAILS AND PLACE RIPRAP BETWEEN OUTLET OPENINGS AS SHOWN IN ELEVATION DETAILS.
3. SERIAL 602-02-1/1 MAY BE REFERENCED FOR DESCRIPTIONS OF WIRE MESH AND ALTERNATE PATTERNS.
4. STEEL STAKES MAY BE RAILROAD RAILS WEIGHING NOT LESS THAN 30 LBS. PER YARD, 4" NOMINAL DIAMETER STANDARD STRENGTH GALVANIZED STEEL PIPE, OR L 4" X 4"X 3/8" STEEL ANGLES. STEEL STAKES SHALL PROJECT 6" ABOVE TOP OF RIPRAP. STEEL STAKES ARE CONSIDERED INCIDENTAL TO THE COMPLETION OF THE WORK AND NO DIRECT MEASUREMENT OR PAYMENT WILL BE MADE THEREFORE.
5. CONTRACTOR MAY SUBSTITUTE CONCRETE CHEMICAL ANCHORS WITH HOOK GEOMETRY SHOWN, WHICH MEET REQUIREMENTS OF SECTION 522.
6. TOE-IN OR PLACE EROSION CONTROL GEOTEXTILE UNDER FOOTINGS OR CUT-OFF WALL.
7. L (MIN.) = 10'-0" OR 1.5 x DIAMETER OR RISE, WHICHEVER IS GREATER.

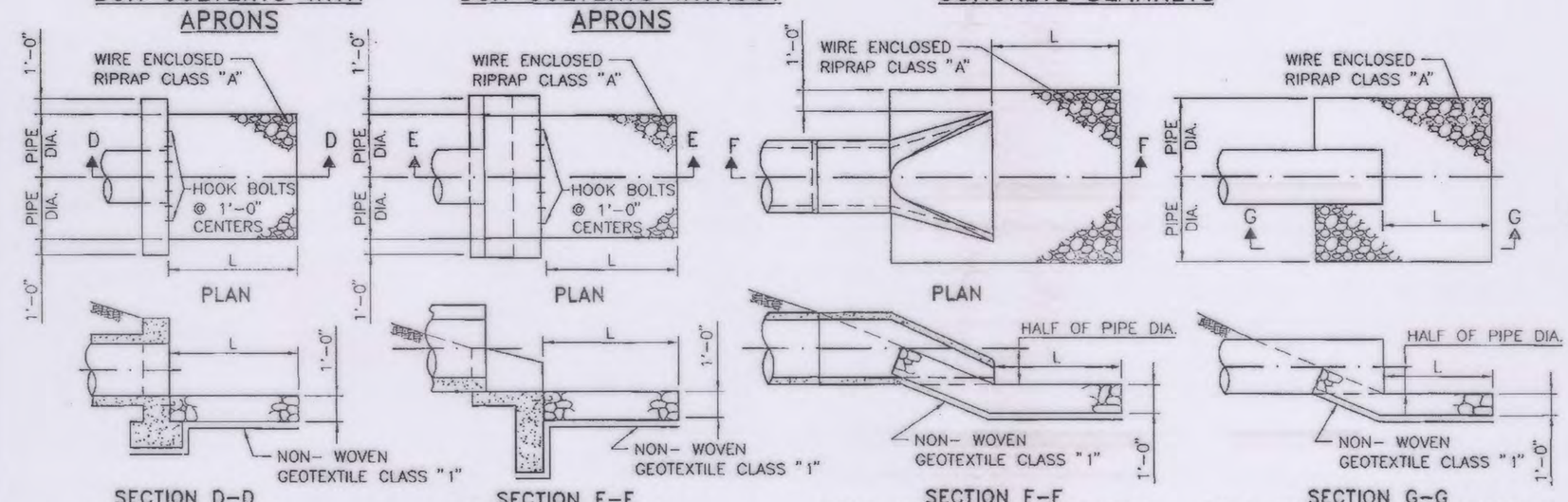

H-1 HEADWALL

H-2 HEADWALL

PIPE WITH END SECTIONS

PIPE WITHOUT HEADWALLS

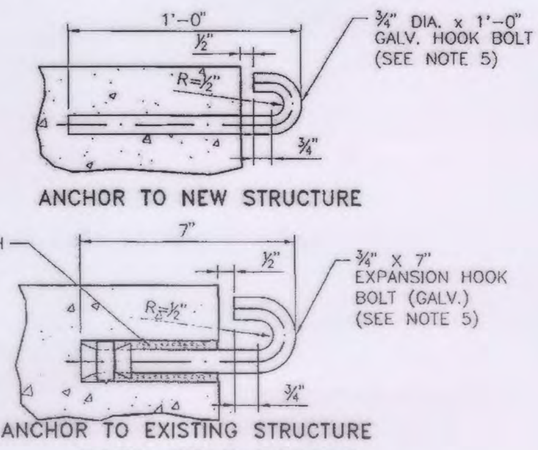

HOOK BOLT DETAILS

COST OF HOOK BOLT IN PLACE TO BE INCLUDED IN UNIT BID PRICE FOR RIPRAP.

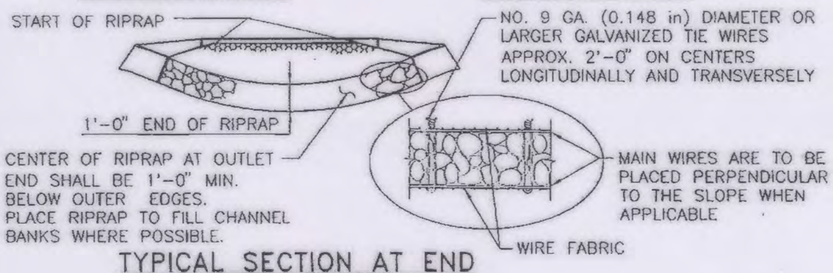

TYPICAL SECTION AT END OF RIPRAP

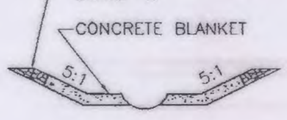

SECTION H-H

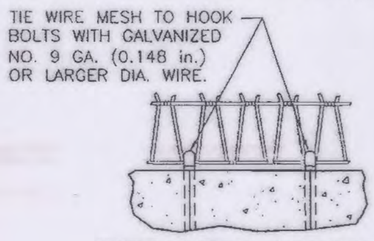

WIRE MESH ANCHOR

NOTE: SEE SHEET 602-01-1/1 FOR WIRE MESH SPLICE DETAILS.

NO.	DATE	REV.BY	DESCRIPTION
1	8/09/09	YML	GENERAL REVISIONS

REVISIONS (OR CHANGE NOTICES)

NEW MEXICO DEPARTMENT OF TRANSPORTATION STANDARD DRAWING

EROSION CONTROL AT CULVERT OUTLETS

DESIGNED BY TM DRAWN BY SKL CHECKED BY YML

602-02-1/1 1 of 1

SHEET NO: 12-4

SHEET TITLE: NMDOT STANDARD DETAILS

DATE: JAN 2015
CHECKED BY: CAP
DRAWN BY: JEM
DESIGNED BY: JEL
PROJECT NO: 116000230

REV.	DATE	DESCRIPTION	BY

PROJECT NAME

CITY OF BELEN
CAMINO DEL LLANO PONDS

NMDOT

CITY OF BELEN THE HUB CITY STATE OF NEW MEXICO

WILSON & COMPANY
4900 LANG AVE. NE
ALBUQUERQUE, NM 87109
PHONE: 505-348-4000
FAX: 505-348-4055 FIRST FLOOR
FAX: 505-348-4155 SECOND FLOOR
www.wilsonco.com

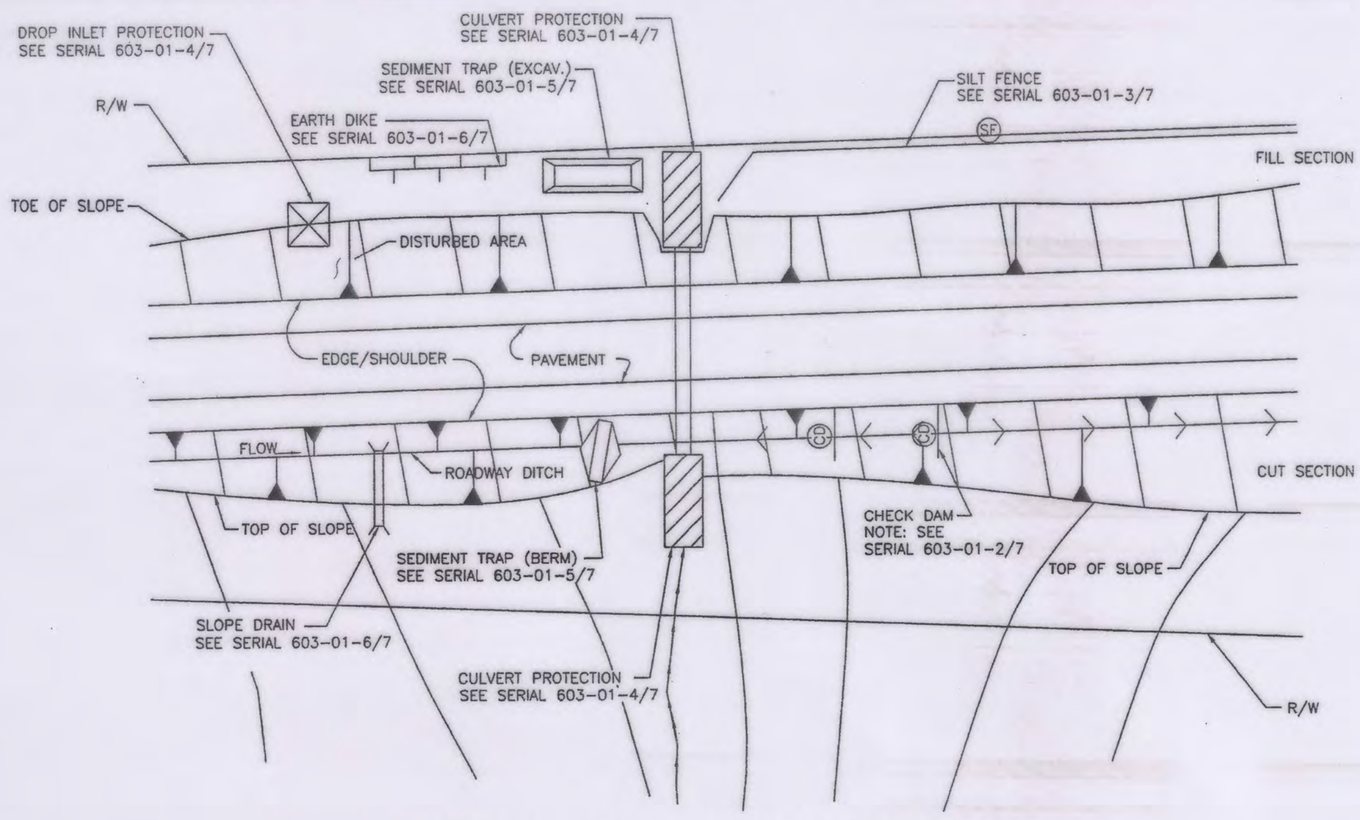

TYPICAL USAGE OF SELECTED EROSION AND SEDIMENT CONTROL MEASURES

TEMPORARY EROSION & SEDIMENT CONTROL MEASURES (T.E.S.C.M.)

GENERAL NOTES

1. THE SOIL RETENTION BLANKET INSTALLATION DETAILS SHOWN FOR CULVERT PROTECTION SHALL BE USED FOR ALL TEMPORARY EROSION AND SEDIMENT CONTROL MEASURES UTILIZING SOIL RETENTION BLANKETS UNLESS OTHERWISE NOTED.
2. ROCK PLATING USED IN THE TEMPORARY EROSION AND SEDIMENT CONTROL MEASURES SHOWN ON THESE SHEETS SHALL HAVE A MINIMUM THICKNESS OF 6 INCHES UNLESS OTHERWISE INDICATED.
3. ALL TEMPORARY EROSION AND SEDIMENT CONTROL MEASURES PLACED WITHIN THE CONSTRUCTION CLEAR ZONE SHALL BE INSTALLED WITH 8:1 SLOPES PARALLEL TO TRAFFIC AND 4:1 SLOPES PERPENDICULAR TO TRAFFIC.
4. SEDIMENT TRAPS SHALL BE CLEANED OF ACCUMULATED SEDIMENT WHEN APPROXIMATELY 50% FILLED.
5. CHECK DAMS SHALL BE CLEANED OF ACCUMULATED SEDIMENT WHEN THE DEPOSITS REACH APPROXIMATELY ONE-HALF THE HEIGHT OF THE CHECK DAM.
6. CULVERT PROTECTIONS SHALL BE INSTALLED UPON INITIATION OF EARTH WORK ACTIVITIES AND MAINTAINED AS MUCH AS PRACTICAL UNTIL STABILIZATION IS COMPLETED AND ACCEPTED. CULVERT PROTECTIONS MAY BE REMOVED FOR PERIODS OF TIME AS REQUIRED DURING CONSTRUCTION TO COMPLETE ADJACENT IMPROVEMENTS.
7. THE CONTRACTOR MAY CONSTRUCT AN EARTH DIKE AS SHOWN, OR RELOCATE THE CHECK DAMS AS CONSTRUCTION PROGRESSES. NO DIRECT PAYMENT SHALL BE MADE FOR RELOCATION OF THE CHECK DAMS.
8. STRAW BALES ARE NOT INTENDED FOR USE ON NEW MEXICO DEPARTMENT OF TRANSPORTATION PROJECTS.

STANDARD SYMBOLS FOR EROSION AND SEDIMENT CONTROL MEASURES

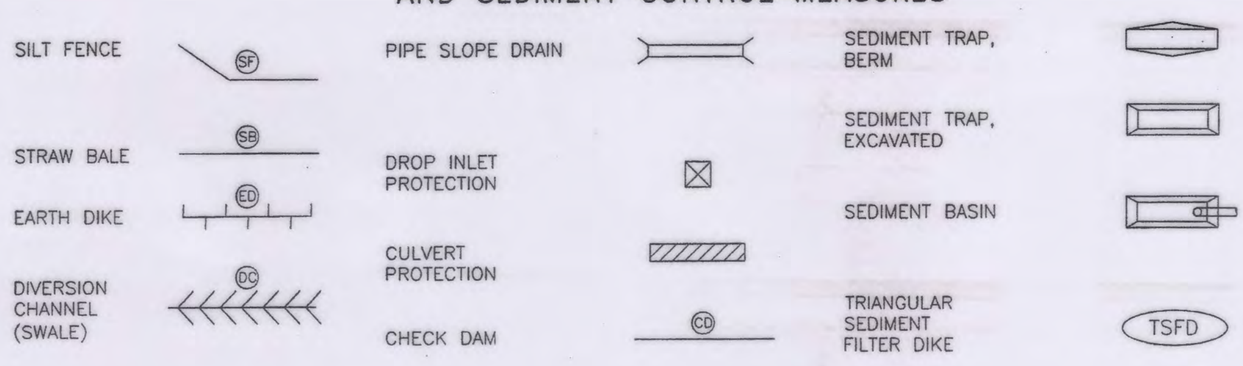

NO.	DATE	REV. BY	DESCRIPTION

REVISIONS (OR CHANGE NOTICES)

NEW MEXICO DEPARTMENT OF TRANSPORTATION STANDARD DRAWING

TEMPORARY EROSION & SEDIMENT CONTROL MEASURES

APPROVED Raymunda VanHoven 11/29/04
DESIGN ENGINEER DATE

DESIGNED BY___ DRAWN BY ___ CHECKED BY ___

603-01-1/7 SERIAL 1 OF 7

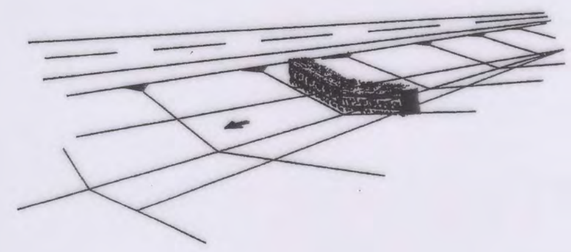

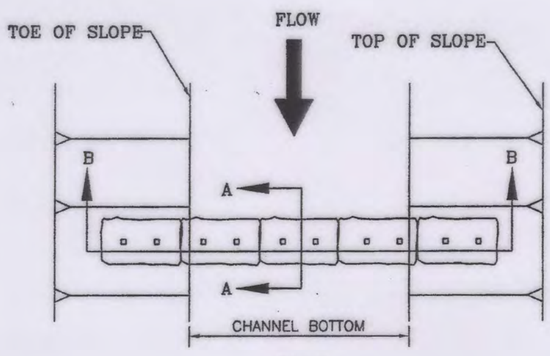

PLAN

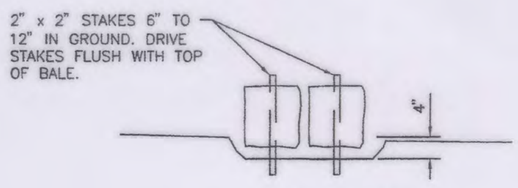

SECTION A-A

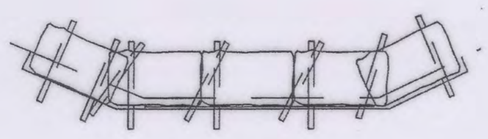

SECTION B-B

TYPE III
(STRAW BALE)

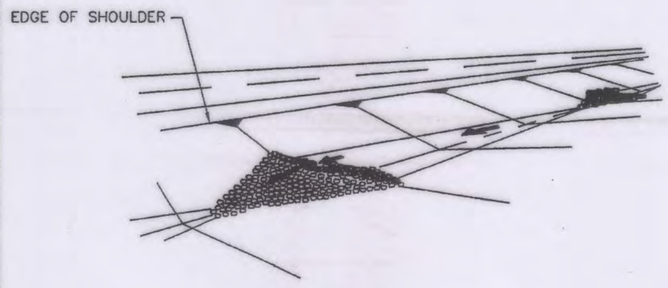

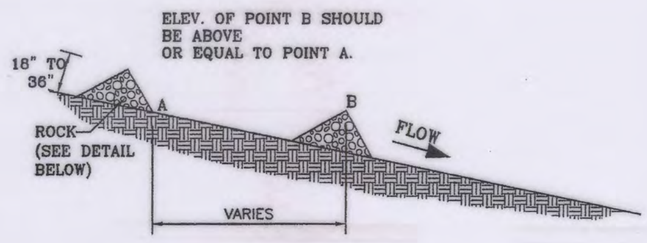

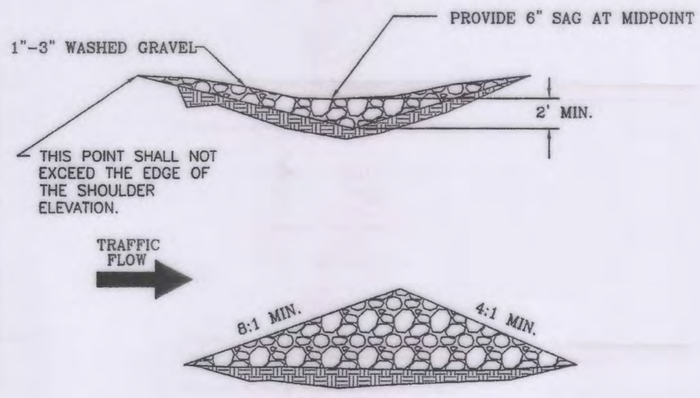

TYPE II
STONE DAM

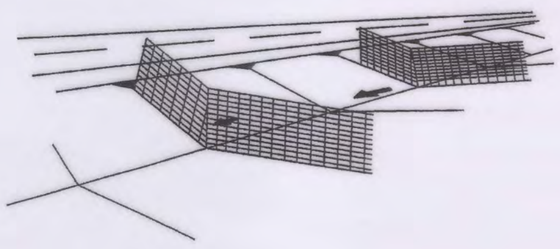

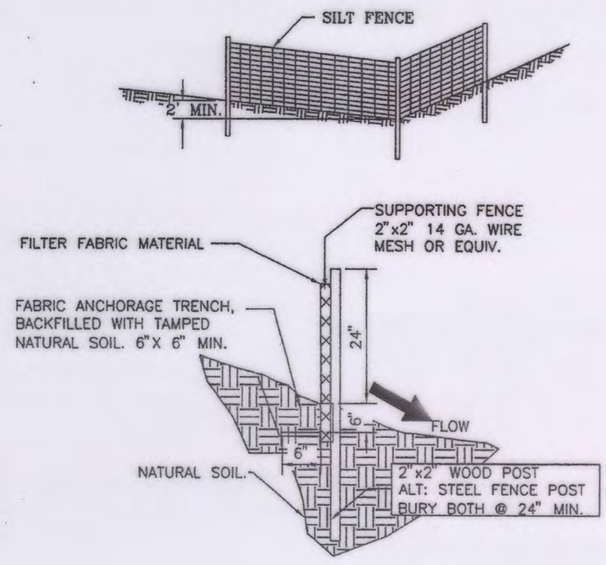

TYPE I SILT FENCE

NO.	DATE	REV. BY	DESCRIPTION

REVISIONS (OR CHANGE NOTICES)

NEW MEXICO DEPARTMENT OF TRANSPORTATION STANDARD DRAWING

TEMPORARY EROSION & SEDIMENT CONTROL MEASURES CHECK DAMS

APPROVED Raymunda VanHoven 11/29/04
DESIGN ENGINEER DATE

DESIGNED BY___ DRAWN BY ___ CHECKED BY ___

603-01-2/7 SHEET 2 OF 7

SHEET NO: 12-5

SWPPP NMDOT STANDARD DETAILS

SHEET TITLE

DATE: JAN 2015
CHECKED BY: CAP
DRAWN BY: JEM
DESIGNED BY: JEL
PROJECT NO: 116002300

REV.	DATE	DESCRIPTION	BY

PROJECT NAME

CITY OF BELEN
CAMINO DEL LLANO PONDS

NMDOT

CITY OF BELEN THE HUB CITY STATE OF NEW MEXICO

WILSON & COMPANY
4900 LANG AVE. NE
ALBUQUERQUE, NM 87109
PHONE: 505-348-4000
FAX: 505-348-4055 FIRST FLOOR
FAX: 505-348-4155 SECOND FLOOR
www.wilsonco.com

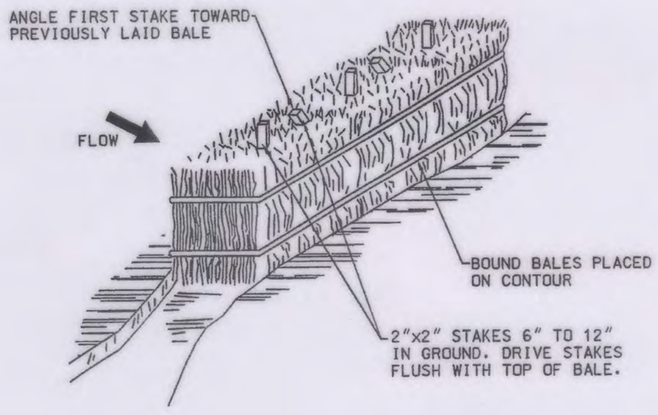

TYPE II
STRAW BALE OPTION

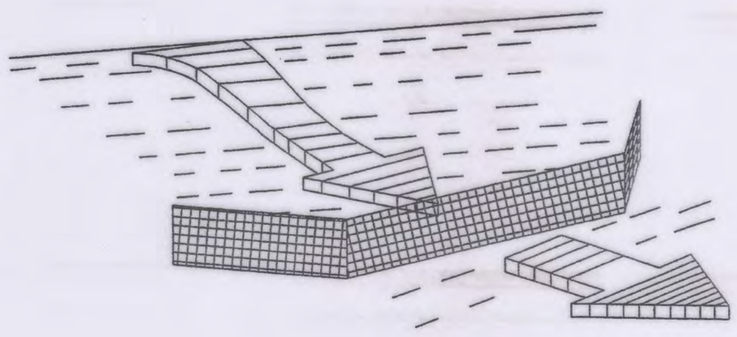

TYPE I
SILT FENCE

NOTES: SILT FENCE AND CHECK DAM

THE CONTRACTOR SHALL BE RESPONSIBLE FOR DETERMINING THE POST SPACING FOR SILT FENCES TO MINIMIZE MAINTENANCE.

1. POST SPACING SHALL BE 4 FT. MAXIMUM WITHOUT SUPPORTING FENCE, 10 FT. MAXIMUM WITH SUPPORTING FENCE.
2. POSTS FOR 4 FT. MAXIMUM POST SPACING SHALL BE 2 INCH SQUARE NOMINAL SIZE OR HEAVIER WOOD POSTS, OR STANDARD "T" OR "U" SECTION STEEL POSTS WEIGHING NOT LESS THAN 2 LBS. PER. LINEAR FOOT.

   POSTS FOR 10 FT. MAXIMUM POST SPACING SHALL BE 4 INCH SQUARE NOMINAL SIZE OR HEAVIER WOOD POSTS, OR STEEL POSTS AS SPECIFIED ABOVE.
3. SUPPORTING FENCE SHALL BE WIRE MESH (14 GA. MIN., 1 INCH MAX. MESH OPENINGS), SNOW FENCE, PLASTIC FENCE OR APPROVED.
4. SUPPORTING FENCE SHALL BE FASTENED SECURELY TO POSTS WITH STAPLES OR WIRE TIES. GEOTEXTILE FABRIC SHALL BE FASTENED SECURELY TO SUPPORTING FENCE WITH WIRE TIES SPACED AT 2 FT. CENTERS ALONG THE TOP AND MID-SECTION. WHEN A SUPPORTING FENCE IS NOT USED, GEOTEXTILE FABRIC SHALL BE SECURELY FASTENED TO POSTS WITH STAPLES OR WIRE TIES.
5. WHEN SILT FENCE IS USED FOR CHECK DAMS INSTALLED IN DITCHES, A SUPPORTING FENCE SHALL BE PROVIDED, WITH MAXIMUM POST SPACING OF 10 FT.
6. STANDARD "T" OR "U" SECTION STEEL POSTS SHALL NOT BE USED WITHIN THE CONSTRUCTION CLEAR ZONE RECOVERY AREA.
7. STRAW BALES ARE NOT INTENDED FOR USE ON NEW MEXICO DEPARTMENT OF TRANSPORTATION PROJECTS.

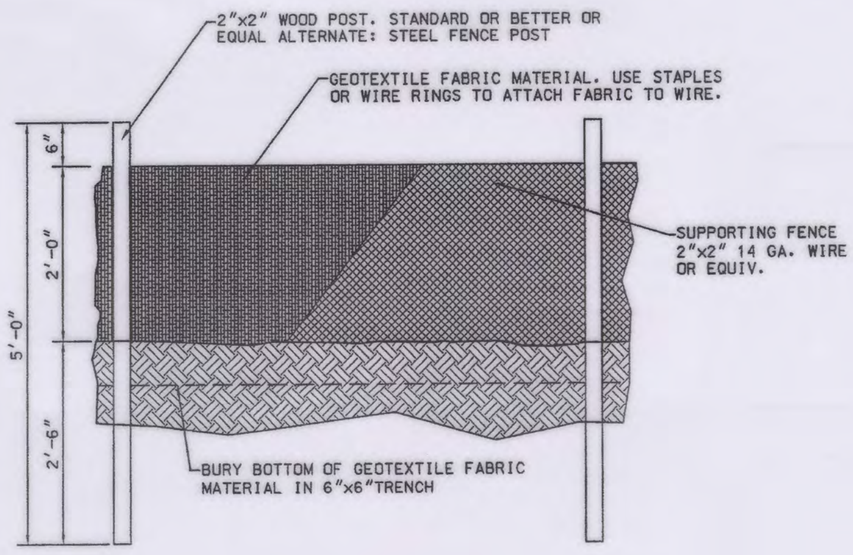

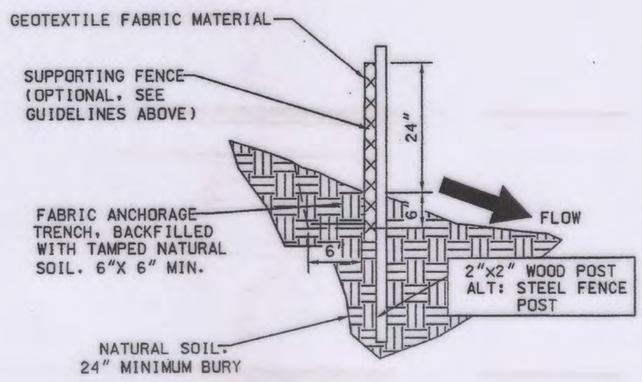

NO.	DATE	REV. BY	DESCRIPTION

REVISIONS (OR CHANGE NOTICES)

NEW MEXICO
DEPARTMENT OF TRANSPORTATION
STANDARD DRAWING

TEMPORARY EROSION & SEDIMENT CONTROL MEASURES
SILT FENCE

APPROVED Raymunda Von Hoven 11/29/04
DESIGN ENGINEER DATE

DESIGNED BY___ DRAWN BY___ CHECKED BY___

603-01-3/7

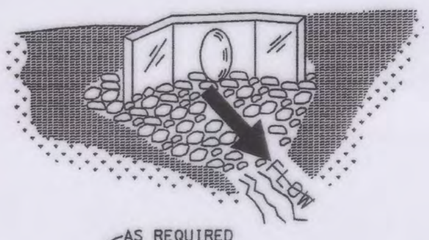

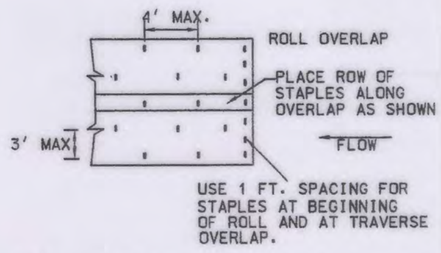

SOIL RETENTION BLANKET
STAPLE PATTERN

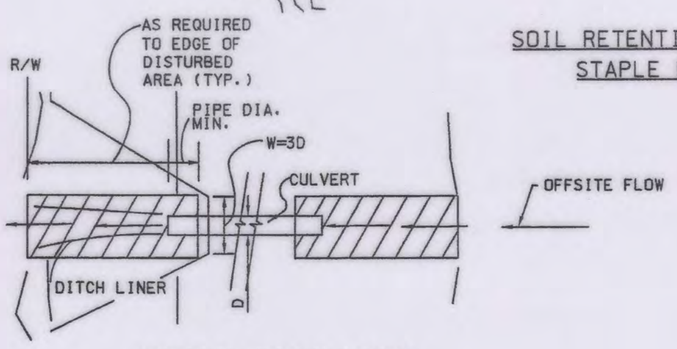

TYPICAL DITCH LINER
INSTALLATIONS AT CULVERTS

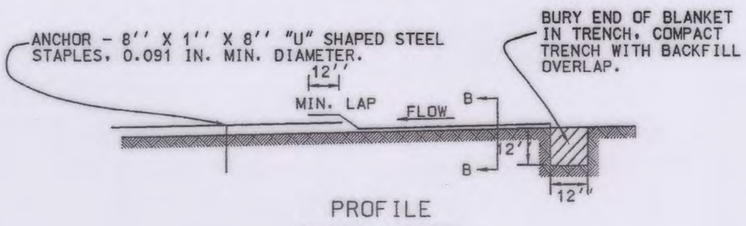

PROFILE
DITCH LINER

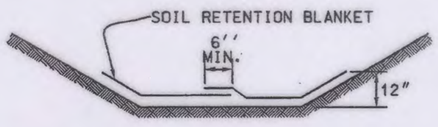

SECTION B-B

NOTES: CULVERT PROTECTION

1. WHEN CULVERT PROTECTION IS SPECIFIED, EITHER SOIL RETENTION BLANKETS OR SOIL RETENTION ROCK MAY BE PROVIDED.
2. THE CULVERT PROTECTION WIDTH REQUIRED SHALL BE IN ACCORDANCE WITH THESE DETAILS UNLESS SPECIFIED OTHERWISE.
3. THE SOIL RETENTION BLANKET INSTALLATION SHOWN OUTLINES MINIMUM REQUIREMENTS. MANUFACTURER'S RECOMMENDATIONS SHALL BE USED IF THEY ARE MORE STRINGENT.

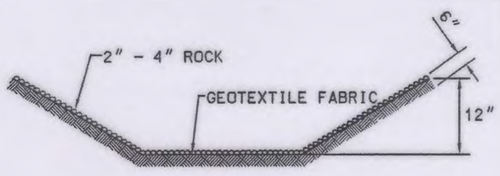

SECTION B-B

CULVERT PROTECTION

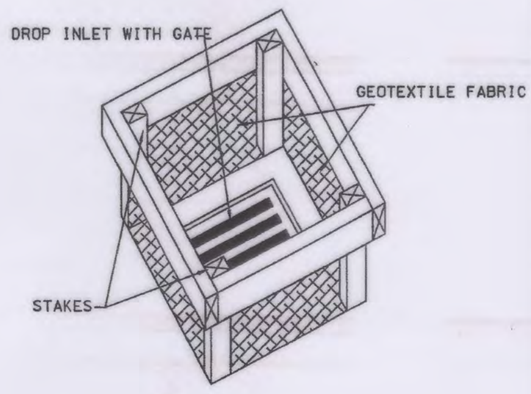

TYPE I

NOTE: WHEN SPECIFIED, ROCKS OR STRAW BALES CAN BE SUBSTITUTED FOR SILT FENCE.

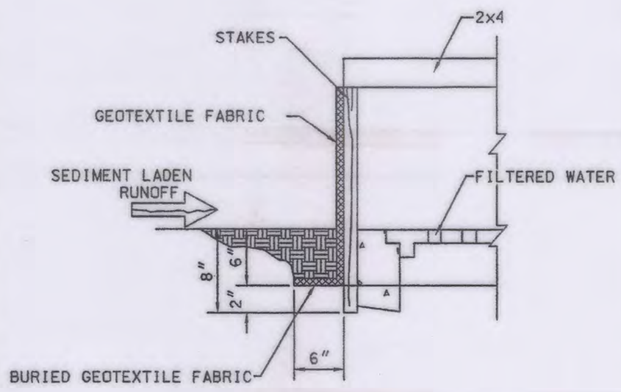

DROP INLET PROTECTION

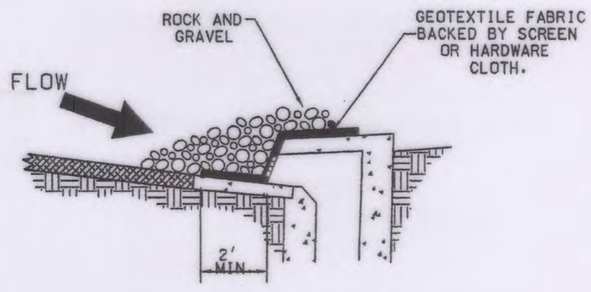

TYPE I
CURB OPENING

NOTES: GRAVEL INLET PROTECTION

1. THIS INSTALLATION IS FOR A TYPE I CURB DROP INLET ONLY. THE TYPE II, III TO "N" INSTALLATION IS SIMILAR.
2. THE SPACING OF THE LONGITUDINAL BRACING SHALL NOT EXCEED 5 FT.

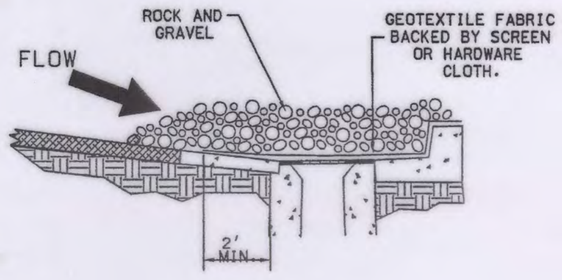

TYPE II
CURB DROP INLET

NO.	DATE	REV. BY	DESCRIPTION

REVISIONS (OR CHANGE NOTICES)

NEW MEXICO
DEPARTMENT OF TRANSPORTATION
STANDARD DRAWING

TEMPORARY EROSION & SEDIMENT CONTROL MEASURES
CULVERT & DROP INLET PROTECTION

APPROVED Raymunda Von Hoven 11/29/04
DESIGN ENGINEER DATE

DESIGNED BY___ DRAWN BY___ CHECKED BY___

603-01-4/7

SHEET NO: 12-6

SHEET TITLE: SWPPP NMDOT STANDARD DETAILS

DATE: JAN 2015
CHECKED BY: CAP
DRAWN BY: JEM
DESIGNED BY: JEL
PROJECT NO: 116002300

REV.	DATE	DESCRIPTION	BY

PROJECT NAME
CITY OF BELEN
CAMINO DEL LLANO PONDS

NMDOT

CITY OF BELEN THE HUB CITY STATE OF NEW MEXICO

WILSON & COMPANY
4900 LANG AVE. NE
ALBUQUERQUE, NM 87109
PHONE: 505-348-4000
FAX: 505-348-4055 FIRST FLOOR
FAX: 505-348-4155 SECOND FLOOR
www.wilsonco.com

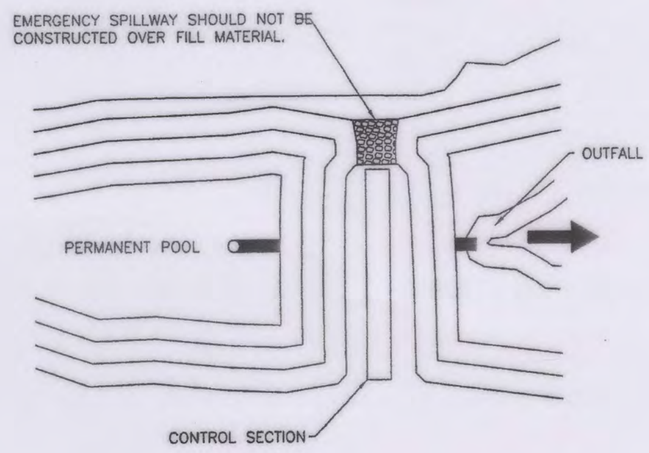

PLAN VIEW

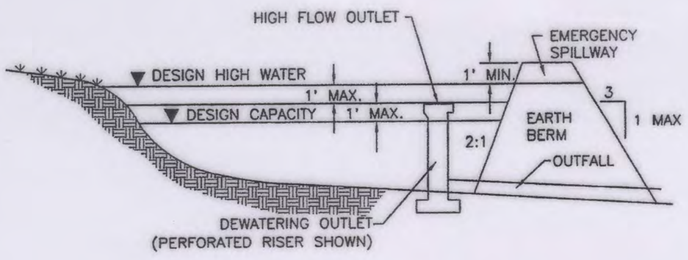

CROSS SECTION

SEDIMENT BASIN

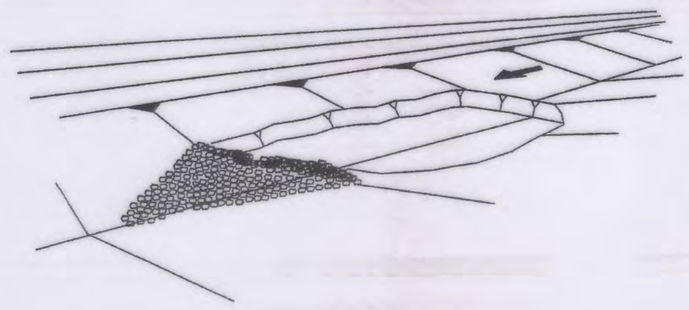

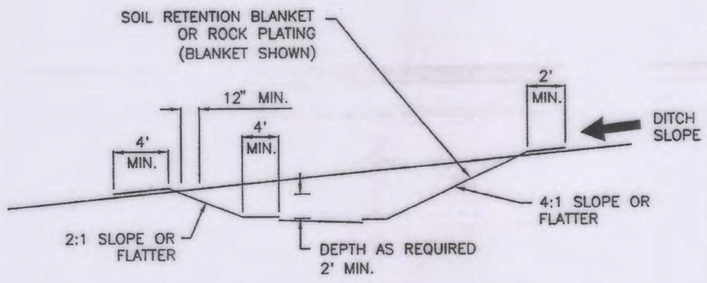

SEDIMENT BASIN, EXCAVATED

NOTES: SEDIMENT TRAP

1. TEMPORARY SEDIMENT TRAPS MAY BE CONSTRUCTED BY EXCAVATION ALONE OR BY EXCAVATION IN COMBINATION WITH AN EMBANKMENT.
2. TEMPORARY SEDIMENT TRAPS ARE OFTEN USED IN CONJUNCTION WITH A DIVERSION DIKE OR SWELL.
3. THE DRAINAGE AREA FOR THE SEDIMENT TRAP SHOULD NOT EXCEED 5 DISTURBED ACRES.
4. THE TRAP MUST BE ACCESSIBLE FOR EASE OF REGULAR MAINTENANCE, WHICH IS CRITICAL TO ITS PROPER FUNCTIONING.
5. SEDIMENT TRAPS ARE TEMPORARY MEASURES AND SHOULD NOT REMAIN IN PLACE LONGER THAN 18 TO 24 MONTHS.
6. THE EMBANKMENT MAY NOT EXCEED 5 FT. IN HEIGHT.
7. THE RECOMMENDED MINIMUM WIDTH AT THE TOP OF THE EMBANKMENT IS BETWEEN 2 FT. AND 5 FT.

SEDIMENT TRAP

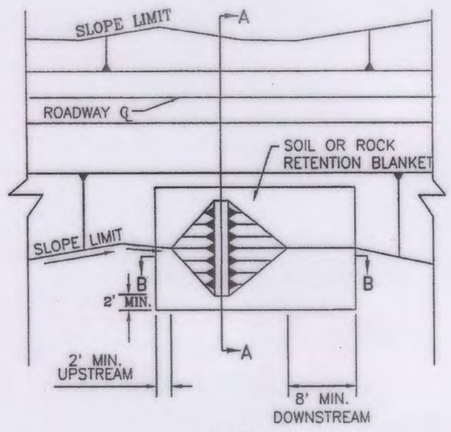

PLAN

SECTION A–A

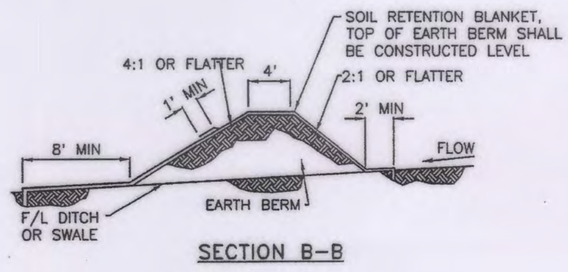

SECTION B–B

EARTH DIKE (BERM)

NO.	DATE	REV. BY	DESCRIPTION

REVISIONS (OR CHANGE NOTICES)

NEW MEXICO
DEPARTMENT OF TRANSPORTATION
STANDARD DRAWING

T.E.S.C.M.
SEDIMENT BASIN, SEDIMENT TRAP & EARTH DIKE

APPROVED Raymond Van Horn 11/29/09
DESIGN ENGINEER DATE

DESIGNED BY___ DRAWN BY ___ CHECKED BY ___

603-01-5/7 SHEET 5 OF 7

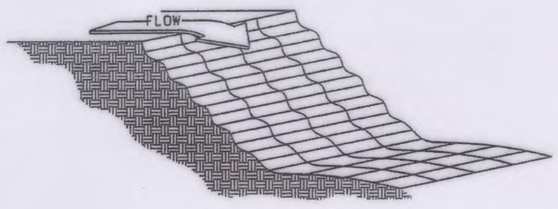

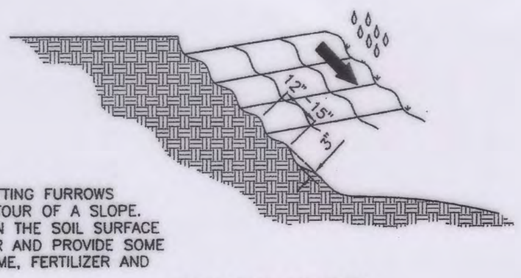

GROOVING IS CUTTING FURROWS ALONG THE CONTOUR OF A SLOPE. IRREGULARITIES IN THE SOIL SURFACE CATCH RAINWATER AND PROVIDE SOME RETENTION OF LIME, FERTILIZER AND SEED.

GROOVING SLOPES

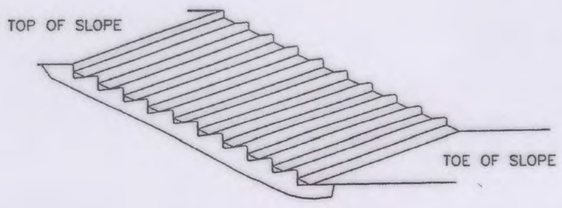

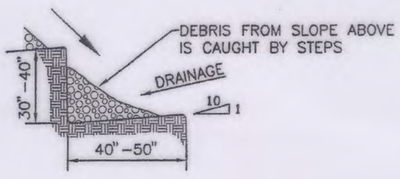

STAIR STEPPING CUT SLOPE

SURFACE ROUGHENING

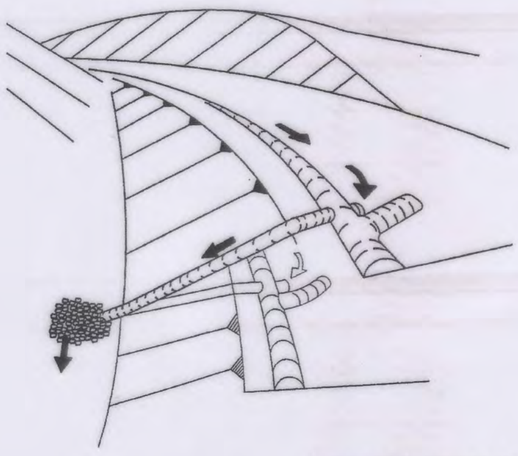

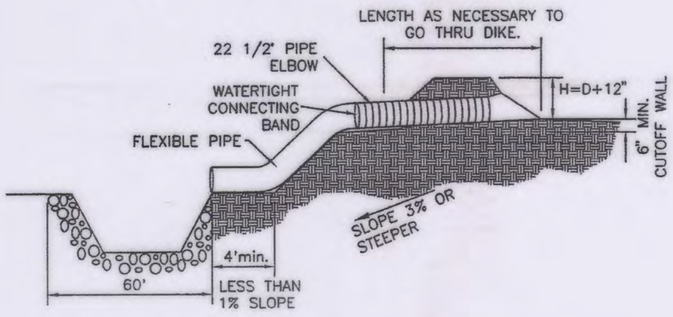

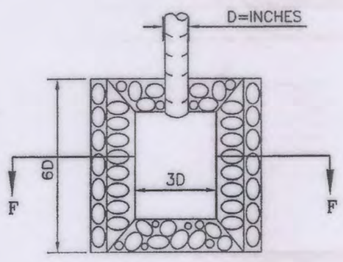

RIPRAP APRON PLAN

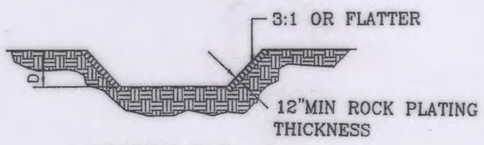

SECTION F–F

SLOPE DRAIN

NOTES: PIPE SLOPE DRAIN

1. THE FLEXIBLE PIPE SHALL BE THE SAME DIAMETER AS THE INLET PIPE AND SHALL BE CONSTRUCTED OF A DURABLE MATERIAL WITH HOLD–DOWN GROMMETS SPACED AT 10 FT. ON CENTER.
2. THE FLEXIBLE PIPE SHALL BE SECURELY FASTENED TO THE CORRUGATED METAL OR HIGH DENSITY POLYETHYLENE PIPE WITH METAL STRAPPING OR WATERTIGHT CONNECTING COLLARS.
3. THE FLEXIBLE PIPE SHALL BE STAKED AT 10 FT. CENTERS ALONG THE SLOPE USING MINIMUM 4 INCH SQUARE WOOD POSTS OR STANDARD STEEL POSTS DRIVEN 2 FT. MINIMUM INTO THE GROUND.
4. RIGID PIPE SHALL BE ANCHORED AT BENDS. ANCHORAGE SHALL CONSIST OF A MINIMUM 4 INCH SQUARE WOOD POSTS OR STANDARD STEEL POSTS DRIVEN 2 FT. MINIMUM INTO GROUND, OR EARTHEN THRUST BLOCK.
5. PAYMENT OF BASIN ITEMS ARE INCIDENTAL TO THE COST OF FLEXIBLE STORM DRAIN PIPE.
6. FOR PIPE DIAMETER ON TEMPORARY SLOPE DRAIN SEE TABLE BELOW

TEMPORARY SLOPE DRAIN PIPES

Runoff Flow Rate (cfs)	Pipe Diameter Required (inches)
0 – 6.0	18
6.0 – 9.0	21
9.0 – 12.0	24
12.0 – 20.0	30

NO.	DATE	REV. BY	DESCRIPTION

REVISIONS (OR CHANGE NOTICES)

NEW MEXICO
DEPARTMENT OF TRANSPORTATION
STANDARD DRAWING

TEMPORARY EROSION & SEDIMENT CONTROL MEASURES PIPE SLOPE DRAIN & SURFACE ROUGHENING

APPROVED Raymond Van Horn 11/29/09
DESIGN ENGINEER DATE

DESIGNED BY___ DRAWN BY ___ CHECKED BY ___

603-01-6/7 SHEET 6 OF 7

SHEET NO: 12-7

SHEET TITLE: SWPPP NMDOT STANDARD DETAILS

DATE: JAN 2015
CHECKED BY: CAP
DRAWN BY: JEM
DESIGNED BY: JEL
PROJECT NO: 116002300

REV.	DATE	DESCRIPTION	BY

PROJECT NAME

CITY OF BELEN
CAMINO DEL LLANO PONDS

NMDOT

CITY OF BELEN THE HUB CITY STATE OF NEW MEXICO

WILSON & COMPANY
4900 LANG AVE. NE
ALBUQUERQUE, NM 87109
PHONE: 505–348–4000
FAX: 505–348–4055 FIRST FLOOR
FAX: 505–348–4155 SECOND FLOOR
www.wilsonco.com

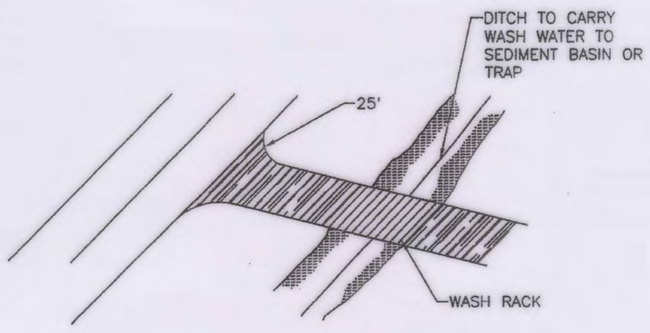

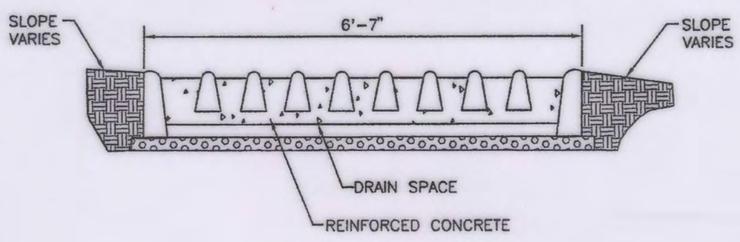

WASH RACK

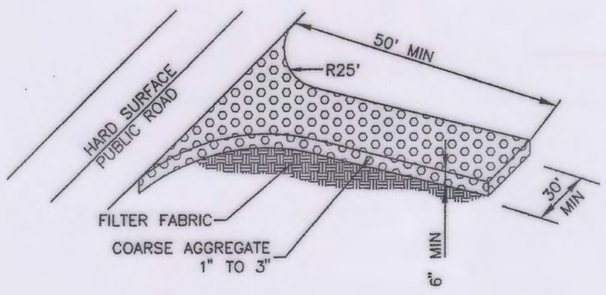

OFFSITE TRACKING PREVENTION

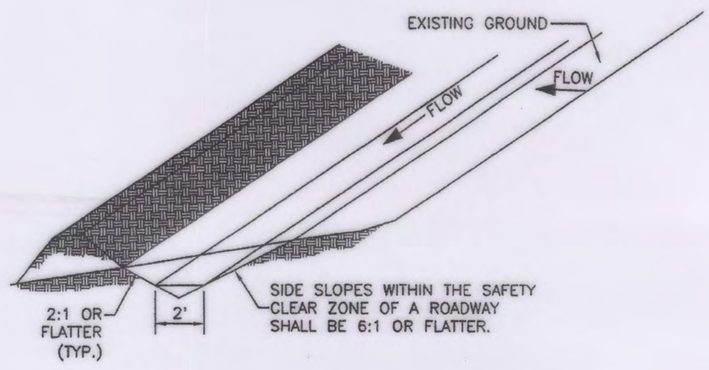

TYPICAL SWALE CONFIGURATION

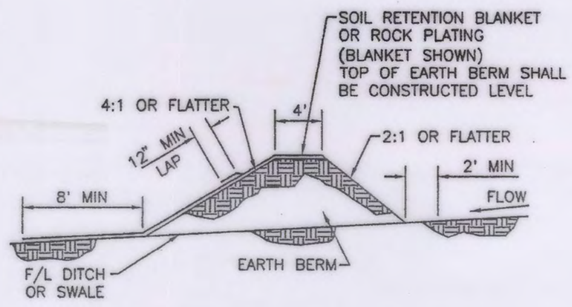

FILTER FABRIC DIVERSION DIKE

DIVERSION DIKE

NO.	DATE	REV. BY	DESCRIPTION

REVISIONS (OR CHANGE NOTICES)

NEW MEXICO
DEPARTMENT OF TRANSPORTATION
STANDARD DRAWING

T.E.S.C.M.
OFFSITE TRACKING
PREVENTION & DIVERSION DIKE

APPROVED Raymond Van Hoven 11/20/09
DESIGN ENGINEER DATE

DESIGNED BY___ DRAWN BY ___ CHECKED BY ___

603-01-7/7 SHEET 7 OF 7

REV.	DATE	DESCRIPTION	BY

PROJECT NO: 116002300
DESIGNED BY: JEL
DRAWN BY: JEM
CHECKED BY: CAP
DATE: JAN 2015
SHEET TITLE
SWPPP NMDOT STANDARD DETAILS
SHEET NO: 12-8

PROJECT NAME
CITY OF BELEN
CAMINO DEL LLANO PONDS

NMDOT

CITY OF BELEN THE HUB CITY STATE OF NEW MEXICO

WILSON & COMPANY
4900 LANG AVE. NE
ALBUQUERQUE, NM 87109
PHONE: 505-348-4000
FAX: 505-348-4055 FIRST FL
FAX: 505-348-4155 SECOND F
www.wilsonco.com

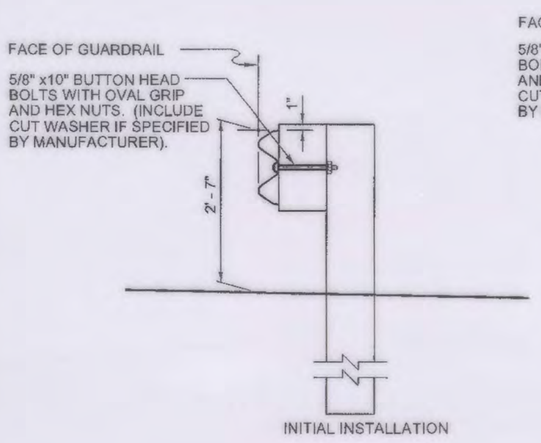

INITIAL INSTALLATION

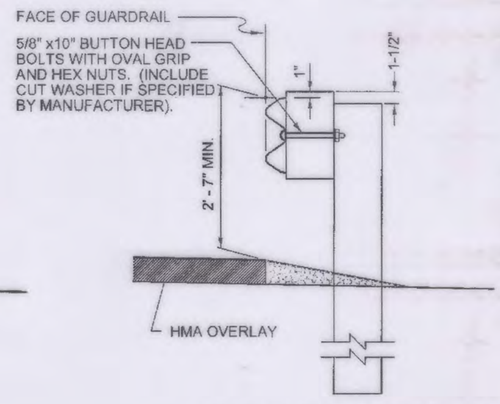

RAISED RAIL ELEMENT FOR HMA OVERLAYS

SINGLE FACE W-BEAM GUARDRAIL

(PAID BY LIN. FT.)

NOTES

1. SINGLE AND DOUBLE FACE W-BEAM GUARDRAIL POST SPACING SHALL BE 6'-3" ON CENTER.
2. SINGLE AND DOUBLE FACE W-BEAM GUARDRAIL SHALL USE W6 x 8.5 STEEL POSTS FOR SPACER BLOCK DETAILS, SEE SHEET 606-GR31-4/20.
3. EXISTING POSTS SHALL NOT BE RAISED. REPLACE POSTS AS NECESSARY TO ACHIEVE REQUIRED GUARDRAIL HEIGHT.
4. REFLECTOR TABS SHALL BE PLACED AT 25' INTERVALS (EVERY 25' AT SPLICE) ON ALL GUARDRAIL INSTALLATIONS (12'-6" ON 2 LANE HIGHWAY). THE COLOR OF THE REFLECTIVE SHEETING ON THE REFLECTOR TABS SHALL BE THE SAME AS THE COLOR OF THE SHOULDER LINE PAVEMENT MARKING IN FRONT OF THE BARRIER. TABS SHALL HAVE A MINIMUM OF 8.75 SQ. IN. OF TYPE VIII OR BETTER REFLECTIVE SHEETING ON BOTH SIDES AND SHALL ATTACH SECURELY UNDER HEAD OF 5/8" BUTTON HEAD BOLT.
5. SPLICES SHALL BE LAPPED SO THE FREE END DOES NOT FACE TRAFFIC FLOW.
6. CONSTRUCTION TOLERANCE SHALL BE ± 1/2" FOR GUARDRAIL HEIGHT.
7. GUARDRAIL FACE MAY BE PLACED AT EDGE OF SHOULDER ONLY WHEN SLOPES BEHIND GUARDRAIL WILL NOT ALLOW FOR 2' TYPICAL SETBACK, SEE SHEET 606-GR31-6/20.
8. POST LEAVE OUT SHALL BE OBSERVED WHEN POSTS ARE RESTRAINED BY ROCK, ASPHALT, OR CONCRETE OR ARE PLACED IN THE SURFACING TAPER. SEE SHEET 606-GR31-5/20 FOR POST LEAVEOUT.
9. DOUBLE FACE W-BEAM GUARDRAIL SHALL BE PAID AS MEASURED ALONG CENTERLINE OF POST OF INSTALLATION. EACH RAIL ELEMENT WILL NOT BE MEASURED AND PAID SEPARATELY.
10. SEE SHEET 606-GR31-6/20 FOR TYPICAL GUARDRAIL INSTALLATIONS.

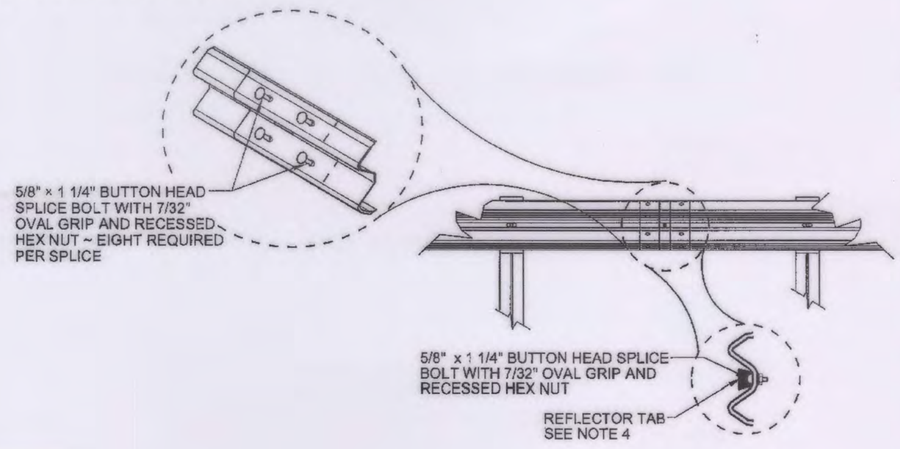

REFLECTOR TABS AT SPLICE

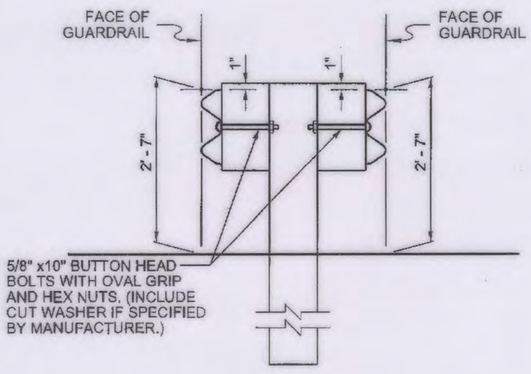

DOUBLE FACE W-BEAM GUARDRAIL

(PAID BY LIN. FT.)

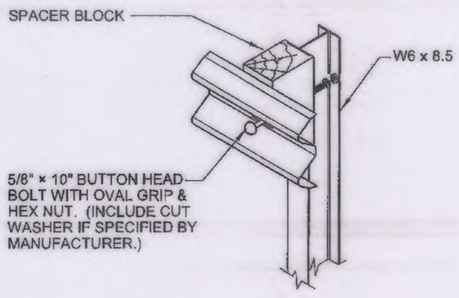

ASSEMBLY DETAIL W-BEAM

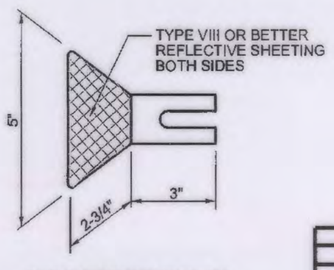

REFLECTORIZED WASHER

AFSHIN JIAN NEW MEXICO 16226 5-6-14 LICENSED PROFESSIONAL ENGINEER

NO.	DATE	REV. BY	DESCRIPTION

REVISIONS (OR CHANGE NOTICES)

NEW MEXICO
DEPARTMENT OF TRANSPORTATION
STANDARD DRAWING

W-BEAM GUARDRAIL

APPROVED _____ DESIGN ENGINEER _____ DATE

DRAWING SCALE = NOT TO SCALE

606-GR31-1/20

edd_trf\preliminary drawings & docs\roadside\Working Folder~GR Type 31 Standards\GR31-1_Beam Guardrail Types 1-2.dgn

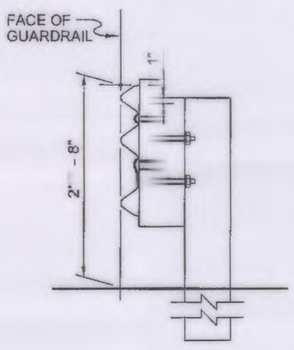

RAIL ASSEMBLY

SINGLE FACE THRIE BEAM GUARDRAIL

(PAID BY LIN. FT.)

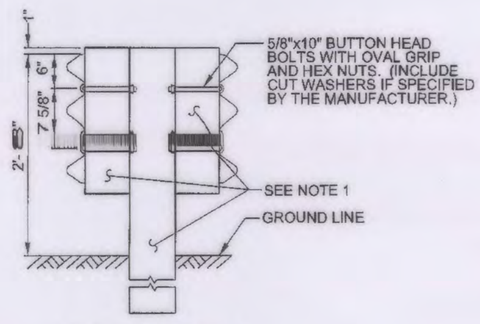

STEEL POST ASSEMBLY

DOUBLE FACE THRIE BEAM GUARDRAIL

(PAID BY LIN. FT.)

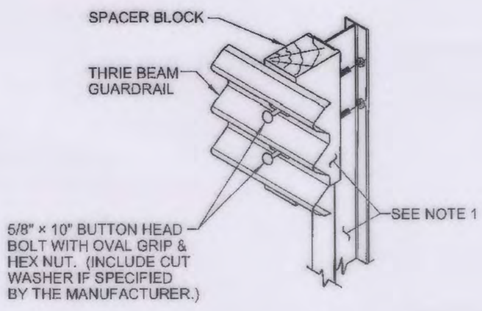

STEEL POST ASSEMBLY

ASSEMBLY DETAIL THRIE BEAM

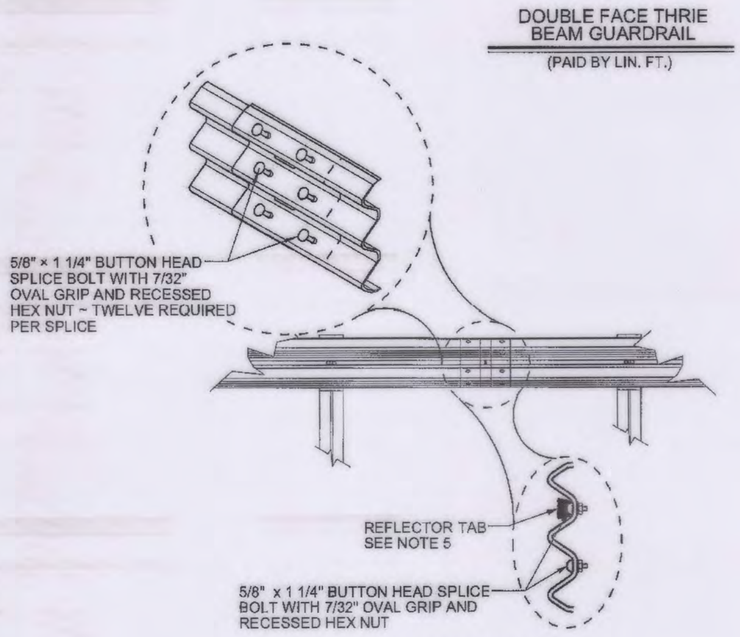

REFLECTOR TAB AT SPLICE

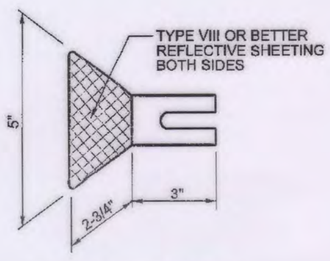

REFLECTORIZED WASHER

NOTES

1. SINGLE AND DOUBLE FACE THRIE BEAM GUARDRAIL SHALL USE W6x15 STEEL POSTS. FOR ADDITIONAL DETAILS SEE SHEET 606-GR31-4/20.
2. UNLESS OTHERWISE SPECIFIED THRIE BEAM GUARDRAIL POST SPACING SHALL BE 6' - 3" ON CENTER.
3. BOLTS ARE TO BE INSTALLED AS SHOWN SO THAT THE THREADED END OF THE BOLTS AND NUTS ARE PLACED AWAY FROM TRAFFIC SIDE OF RAIL.
4. DO NOT PLACE ANY WASHERS UNDER THE BOLTS ON THE TRAFFIC SIDE OF THE BARRIER.
5. REFLECTOR TABS SHALL BE PLACED AT 25' INTERVALS (EVERY 25' AT SPLICE) ON ALL GUARDRAIL INSTALLATIONS (12'-6" ON 2 LANE HIGHWAY). THE COLOR OF THE REFLECTIVE SHEETING ON THE REFLECTOR TABS SHALL BE THE SAME AS THE COLOR OF THE SHOULDER LINE PAVEMENT MARKING IN FRONT OF THE BARRIER. TABS SHALL HAVE A MINIMUM OF 8.75 SQ. IN. OF TYPE VIII OR BETTER REFLECTIVE SHEETING ON BOTH SIDES AND SHALL ATTACH SECURELY UNDER HEAD OF 5/8" BUTTON HEAD BOLT.
6. SPLICES SHALL BE LAPPED SO THE FREE END DOES NOT FACE TRAFFIC FLOW.
7. CONSTRUCTION TOLERANCE SHALL BE +/- 1/2" FOR GUARDRAIL HEIGHT.
8. SEE SHEET 606-G31-6/20 FOR TYPICAL GUARDRAIL INSTALLATION.

AFSHIN JIAN NEW MEXICO 16226 5-6-14 LICENSED PROFESSIONAL ENGINEER

NO.	DATE	REV. BY	DESCRIPTION

REVISIONS (OR CHANGE NOTICES)

NEW MEXICO
DEPARTMENT OF TRANSPORTATION
STANDARD DRAWING

THRIE BEAM GUARDRAIL

APPROVED _____ DESIGN ENGINEER _____ DATE

DRAWING SCALE = NOT TO SCALE

606-GR31-2/20

edd_trf\preliminary drawings & docs\roadside\Working Folder~GR Type 31 Standards\GR31-2_Beam Guardrail Types 3 & 4 (thrie beam).dgn

REV.	DATE	DESCRIPTION	BY

PROJECT NO: 1160002300
DESIGNED BY: JEL
DRAWN BY: JEM
CHECKED BY: CAP
DATE: JAN 2015
SHEET TITLE: NMDOT STANDARD DETAILS
SHEET NO: 12-9

PROJECT NAME

CITY OF BELEN
CAMINO DEL LLANO PONDS

NMDOT

CITY OF BELEN THE HUB CITY STATE OF NEW MEXICO

WILSON & COMPANY
4900 LANG AVE. NE
ALBUQUERQUE, NM 87109
PHONE: 505-348-4000
FAX: 505-348-4055 FIRST FLOOR
FAX: 505-348-4155 SECOND FLOOR
www.wilsonco.com

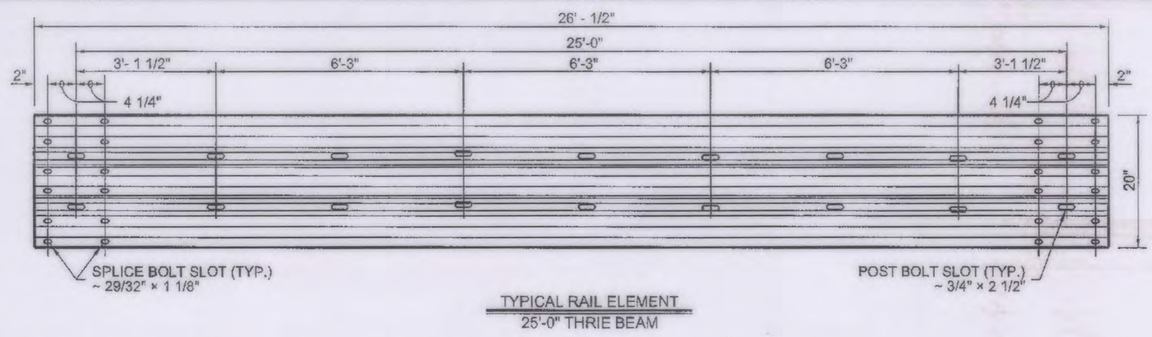

TYPICAL RAIL ELEMENT
25'-0" THRIE BEAM

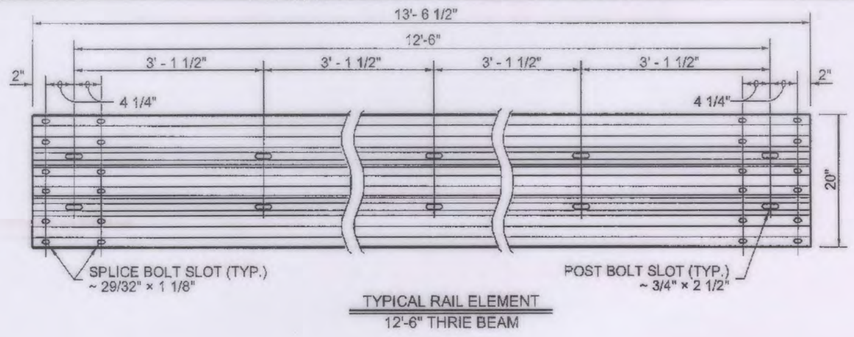

TYPICAL RAIL ELEMENT
12'-6" THRIE BEAM

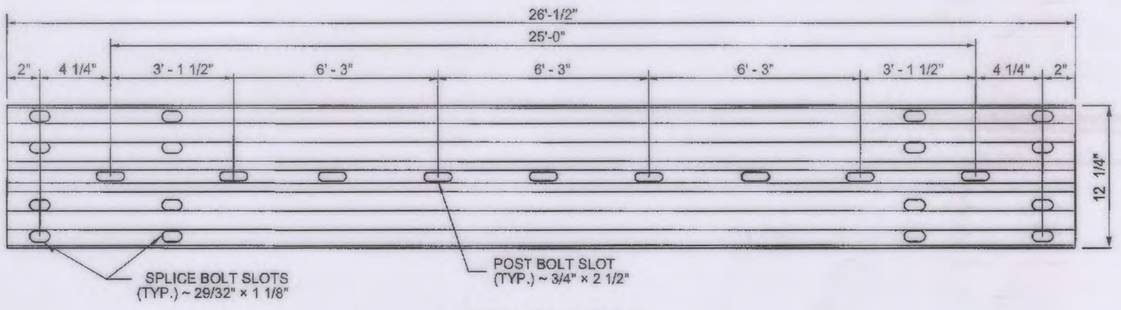

TYPICAL RAIL ELEMENT
25'-0" W-BEAM

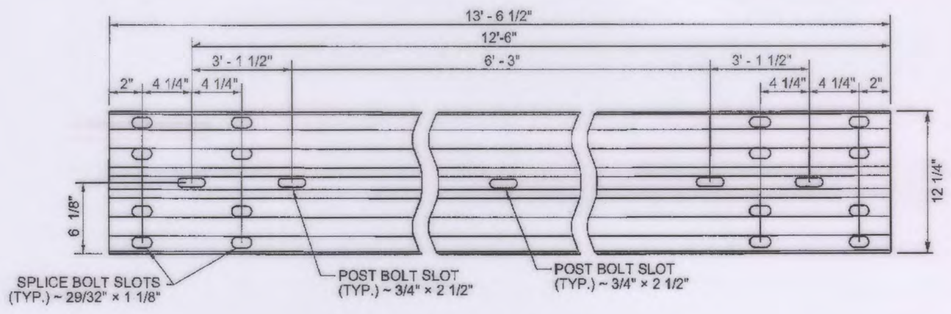

TYPICAL RAIL ELEMENT
12'-6" W-BEAM

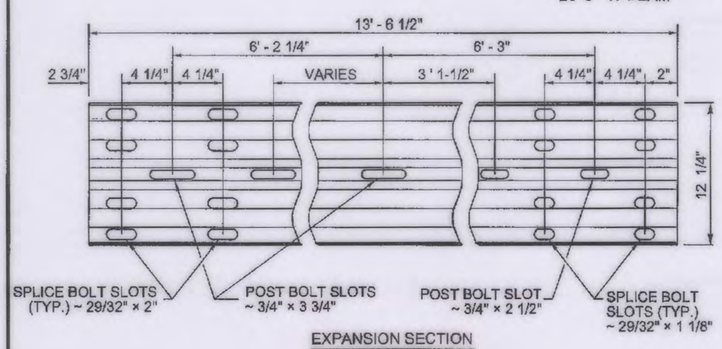

EXPANSION SECTION
W-BEAM

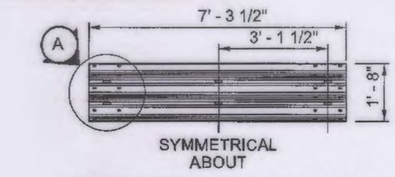

SHORT THRIE BEAM ELEMENT

LEFT
(MIRROR OF RIGHT)

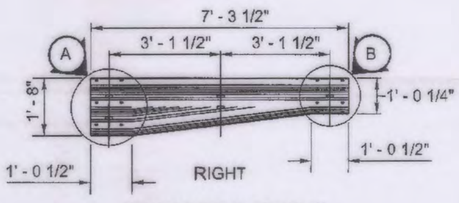

REDUCER ELEMENT
(PAID AS LIN. FT. OF THRIE BEAM)

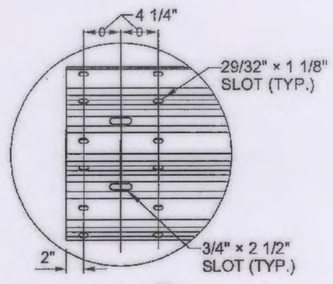

DETAIL (A)

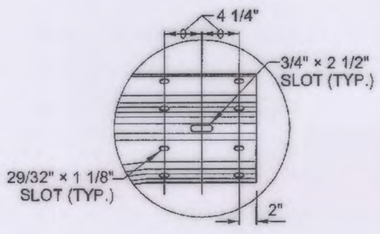

DETAIL (B)

DRAWING SCALE = NOT TO SCALE

NO.	DATE	REV. BY	DESCRIPTION
REVISIONS (OR CHANGE NOTICES)			

NEW MEXICO
DEPARTMENT OF TRANSPORTATION
STANDARD DRAWING

BEAM GUARDRAIL
ELEMENTS

APPROVED _____ DESIGN ENGINEER _____ DATE

606-GR31- 3/20

edd_trf\preliminary drawings & docs\roadside\Working Folder~GR Type 31 Standards\ GR31-3_Beam Guardrails Elements.dgn

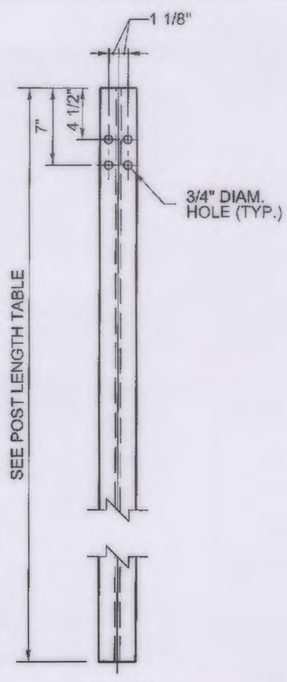

W-BEAM
(W6x8.5)

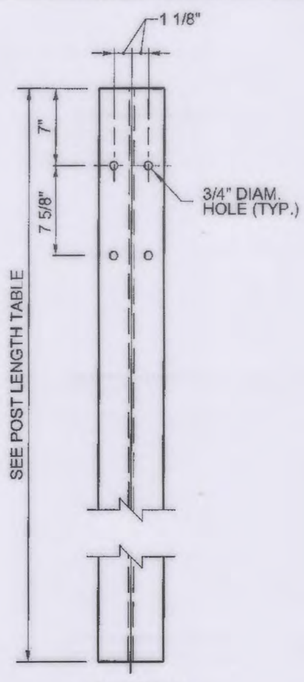

THRIE BEAM
(W6x15)

STEEL POST

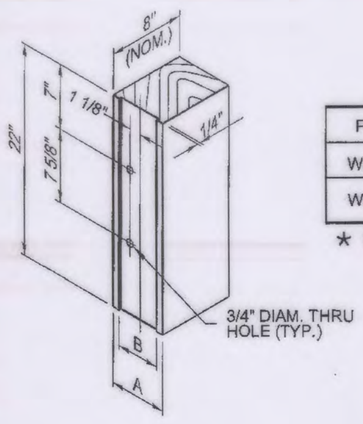

POST	A	B
W6 × 8.5	6"★	4 1/4"
W6 × 15	8"★	6 1/4"

★ NOMINAL (NOM.)

THRIE BEAM SPACER BLOCK
FOR STEEL POST
SEE NOTE

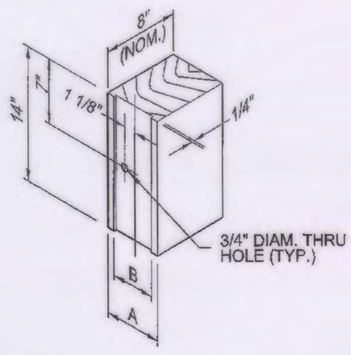

W-BEAM SPACER BLOCK
FOR STEEL POST
SEE NOTE

POST LENGTH TABLE	
DESCRIPTION	STEEL
SINGLE FACE W-BEAM	6' - 0"
DOUBLE FACE W-BEAM	6' - 0"
SINGLE FACE THRIE-BEAM	6' - 6"
DOUBLE FACE THRIE-BEAM	7' - 0"

NOTE:

SPACER BLOCKS MAY CONSIST OF WOOD, PLASTIC, OR COMPOSITE MATERIAL ON THE APPROVED PRODUCTS LIST.

DRAWING SCALE = NOT TO SCALE

NO.	DATE	REV. BY	DESCRIPTION
REVISIONS (OR CHANGE NOTICES)			

NEW MEXICO
DEPARTMENT OF TRANSPORTATION
STANDARD DRAWING

BEAM GUARDRAIL
POSTS AND BLOCKS

APPROVED _____ DESIGN ENGINEER _____ DATE

606-GR31-4/20

edd_trf\preliminary drawings & docs\roadside\Working Folder~GR Type 31 Standards\ GR31-4_Beam Guardrail Posts and Blocks.dgn

SHEET NO: 12-10

SHEET TITLE: NMDOT STANDARD DETAILS

DATE: JAN 2015
CHECKED BY: CAP
DRAWN BY: JEM
DESIGNED BY: JEL
PROJECT NO: 116000230

REV.	DATE	DESCRIPTION	BY

PROJECT NAME

CITY OF BELEN
CAMINO DEL LLANO PONDS

NMDOT

CITY OF BELEN THE HUB CITY STATE OF NEW MEXICO

WILSON & COMPANY
4900 LANG AVE. NE
ALBUQUERQUE, NM 87109
PHONE: 505-348-4000
FAX: 505-348-4055 FIRST FLOOR
FAX: 505-348-4155 SECOND FLOOR
www.wilsonco.com

SUMMARY
FILENAME

NOTES:

1. END TREATMENT SHOWN IS A GENERAL DEPICTION OF A NOMINAL 50' NMDOT ACCEPTED END TERMINAL THAT IS FHWA ACCEPTED AS CRASHWORTHY AT TEST LEVEL 3 (TL-3) AND MAY BE USED FOR ALL POSTED SPEEDS.
2. ACCEPTED SYSTEMS, ON THE DEPARTMENT'S APPROVED PRODUCT LIST, SHALL BE INSTALLED ACCORDING TO MANUFACTURERS' INSTALLATION INSTRUCTIONS.
3. A REFLECTORIZED OBJECT MARKER SHALL BE INSTALLED. ADHESIVE BACKED REFLECTIVE SHEETING MAY BE APPLIED DIRECTLY TO GUARDRAIL END TREATMENT IMPACT HEAD AS PER THE MANUFACTURER'S RECOMMENDATION. DIRECT APPLIED SHEETING SHALL PROVIDE A SMOOTH SURFACE AND HAVE NO WRINKLES, AIR BUBBLES, CUTS OR TEARS. REFLECTIVE MATERIAL SHALL BE TYPE VIII OR BETTER WITH YELLOW BACK GROUND AND BLACK CHEVRON STRIPES. STRIPES SHALL BE ORIENTED WITH THEIR TOPS AWAY FROM TRAFFIC AND ANGLED DOWN AT 45° TOWARDS TRAFFIC.
4. THESE END TREATMENTS DO NOT REQUIRE AN OFFSET AT THE END. END TREATMENTS SHALL BE INSTALLED ENSURING THAT THE END PIECE IS 2' OFF THE SHOULDER. A MAXIMUM FLARE OF 25:1 OR FLATTER OVER THE LENGTH OF THE TREATMENT IS ALLOWED.
5. END TREATMENTS SHALL BE OF THE LENGTH AND TEST LEVEL SPECIFIED IN THESE DRAWINGS AND AS SPECIFIED BY THE THE MANUFACTURER FOR THE INTENDED END TREATMENT TYPE AND TEST LEVEL. ONLY END TREATMENTS CURRENTLY ON THE NMDOT APPROVED PRODUCT LIST WILL BE ACCEPTED FOR INSTALLATION. FOR SPECIFIC END TREATMENT DETAILS, SEE MANUFACTURERS' DRAWINGS.
6. SHOP DRAWINGS AND MANUFACTURERS' INSTALLATION INSTRUCTIONS SHALL BE SUBMITTED BY THE CONTRACTOR TO THE PROJECT MANAGER A MINIMUM OF FIVE DAYS PRIOR TO INSTALLATION TO ENSURE THAT THE COMPONENTS DELIVERED AND INSTALLED BY THE CONTRACTOR ARE IN ACCORDANCE WITH THE MANUFACTURERS' DRAWINGS, SPECIFICATIONS, AND INSTALLATION INSTRUCTIONS.
7. WARP ALL GRADE TRANSITIONS TO CREATE SMOOTH SURFACE CONTOURS.

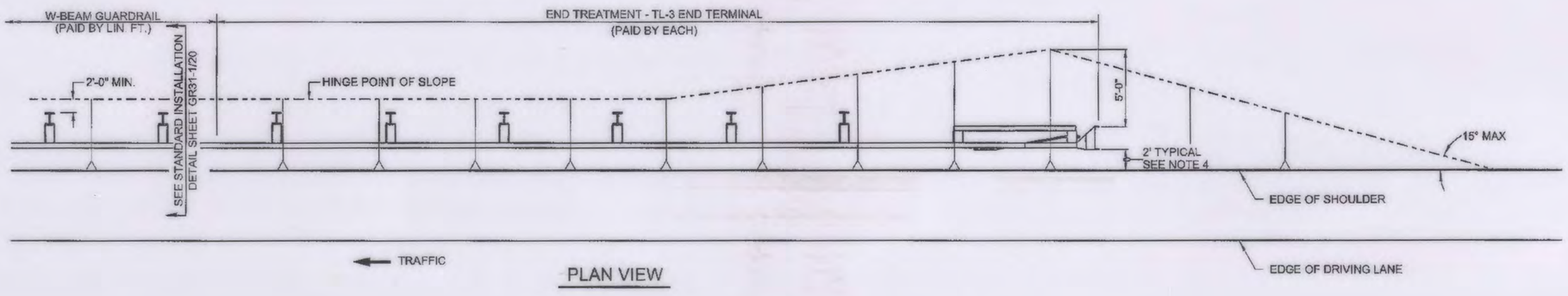

PLAN VIEW

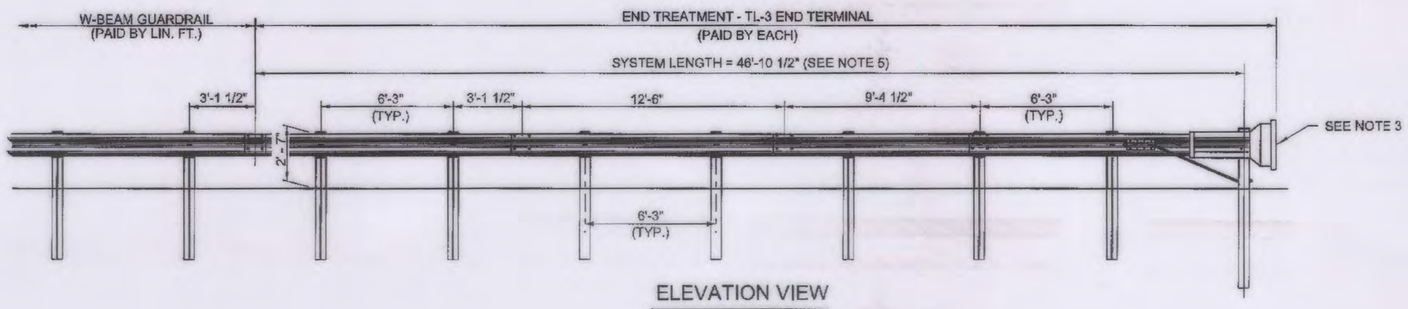

ELEVATION VIEW

AFSHIN JIAN
NEW MEXICO
16226
5-6-14
LICENSED PROFESSIONAL ENGINEER

NO.	DATE	REV. BY	DESCRIPTION

REVISIONS (OR CHANGE NOTICES)

NEW MEXICO
DEPARTMENT OF TRANSPORTATION
STANDARD DRAWING

END TREATMENT
TL-3 END TERMINAL

APPROVED _____ DESIGN ENGINEER _____ DATE

DRAWING SCALE = NOT TO SCALE

606-GR31-7/20

edd_trf\preliminary drawings & docs\roadside\Working Folder~GR Type 31 Standards\GR31-7 Beam Guardrail End Terminal Type 1.dgn

SUMMARY
FILENAME

NOTES:

1. END TREATMENT SHOWN IS A GENERAL DEPICTION OF A NOMINAL 37'-6" NMDOT ACCEPTED END TERMINAL THAT IS FHWA ACCEPTED AS CRASHWORTHY AT TEST LEVEL 2 (TL-2) AND MAY BE USED IN APPLICATIONS WITH SPEEDS OF 40 MPH OR LESS.
2. ACCEPTED END TREATMENT, ON THE DEPARTMENT'S APPROVED PRODUCT LIST, SHALL BE INSTALLED ACCORDING TO MANUFACTURERS' INSTALLATION INSTRUCTIONS.
3. A REFLECTORIZED OBJECT MARKER SHALL BE INSTALLED. ADHESIVE BACKED REFLECTIVE SHEETING MAY BE APPLIED DIRECTLY TO GUARDRAIL END TREATMENT IMPACT HEAD AS PER THE MANUFACTURERS RECOMMENDATION. DIRECT APPLIED SHEETING SHALL PROVIDE A SMOOTH SURFACE AND HAVE NO WRINKLES, AIR BUBBLES, CUTS OR TEARS. REFLECTIVE MATERIAL SHALL BE TYPE VIII OR BETTER WITH YELLOW BACK GROUND AND BLACK CHEVRON STRIPES. STRIPES SHALL BE ORIENTED WITH THEIR TOPS AWAY FROM TRAFFIC AND ANGLED DOWN AT 45° TOWARDS TRAFFIC.
4. THESE END TREATMENTS DO NOT REQUIRE AN OFFSET AT THE END. END TREATMENTS SHALL BE INSTALLED ENSURING THE END PIECE IS 2' OFF THE SHOULDER. A MAXIMUM FLARE OF 25:1 OR FLATTER OVER THE LENGTH OF THE TREATMENT IS ALLOWED.
5. END TREATMENTS SHALL BE OF THE LENGTH AND TEST LEVEL SPECIFIED IN THESE DRAWINGS AND AS SPECIFIED BY THE MANUFACTURER FOR THE INTENDED END TREATMENT TYPE TEST LEVEL. ONLY END TREATMENTS CURRENTLY ON THE NMDOT APPROVED PRODUCTS LIST WILL BE ACCEPTED FOR INSTALLATION. FOR SPECIFIC END TREATMENT DETAILS, SEE MANUFACTURERS' DRAWINGS.
6. SHOP DRAWINGS AND MANUFACTURERS' INSTALLATION INSTRUCTIONS SHALL BE SUBMITTED BY THE CONTRACTOR TO THE PROJECT MANAGER A MINIMUM OF FIVE DAYS PRIOR TO INSTALLATION TO ENSURE THAT THE COMPONENTS DELIVERED AND INSTALLED BY THE CONTRACTOR ARE IN ACCORDANCE WITH THE MANUFACTURER'S DRAWINGS, SPECIFICATIONS, AND INSTALLATION INSTRUCTIONS.
7. WARP ALL GRADE TRANSITIONS TO CREATE SMOOTH SURFACE CONTOURS.

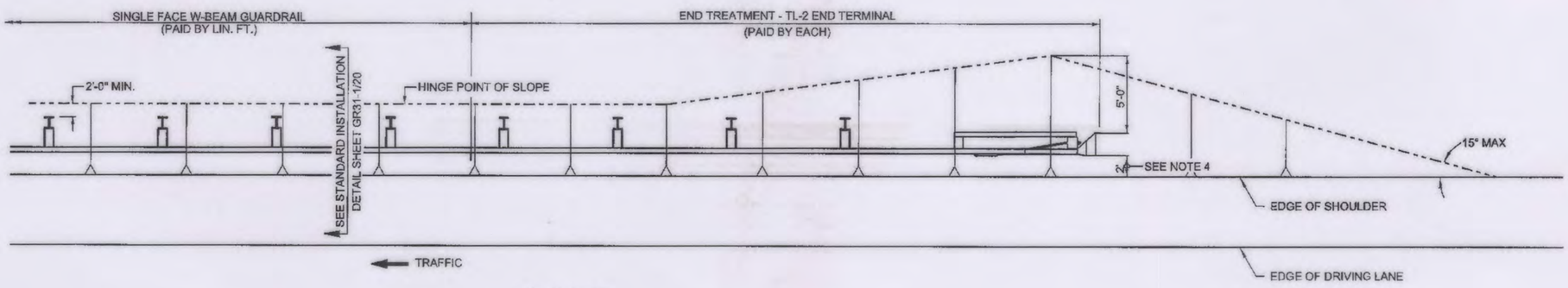

PLAN VIEW

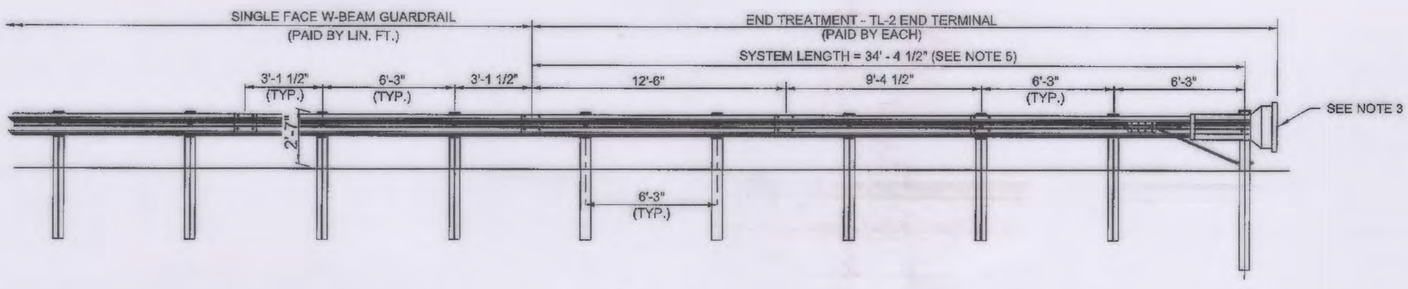

ELEVATION VIEW

AFSHIN JIAN
NEW MEXICO
16226
5-6-14
LICENSED PROFESSIONAL ENGINEER

NO.	DATE	REV. BY	DESCRIPTION

REVISIONS (OR CHANGE NOTICES)

NEW MEXICO
DEPARTMENT OF TRANSPORTATION
STANDARD DRAWING

END TREATMENT
TL-2 END TERMINAL

APPROVED _____ DESIGN ENGINEER _____ DATE

DRAWING SCALE = NOT TO SCALE

606-GR31-8/20

edd_trf\preliminary drawings & docs\roadside\Working Folder~GR Type 31 Standards\GR31-8 Beam Guardrail End Terminal Type 2.dgn

SHEET NO: 12-11

SHEET TITLE: NMDOT STANDARD DETAILS

DATE: JAN 2015
CHECKED BY: CAP
DRAWN BY: JEM
DESIGNED BY: JEL
PROJECT NO: 116002300

REV.	DATE	DESCRIPTION	BY

PROJECT NAME

CITY OF BELEN
CAMINO DEL LLANO PONDS

NMDOT

CITY OF BELEN THE HUB CITY STATE OF NEW MEXICO

WILSON & COMPANY
4900 LANG AVE. NE
ALBUQUERQUE, NM 87109
PHONE: 505-348-4000
FAX: 505-348-4055 FIRST FLOOR
FAX: 505-348-4155 SECOND FLOOR
www.wilsonco.com

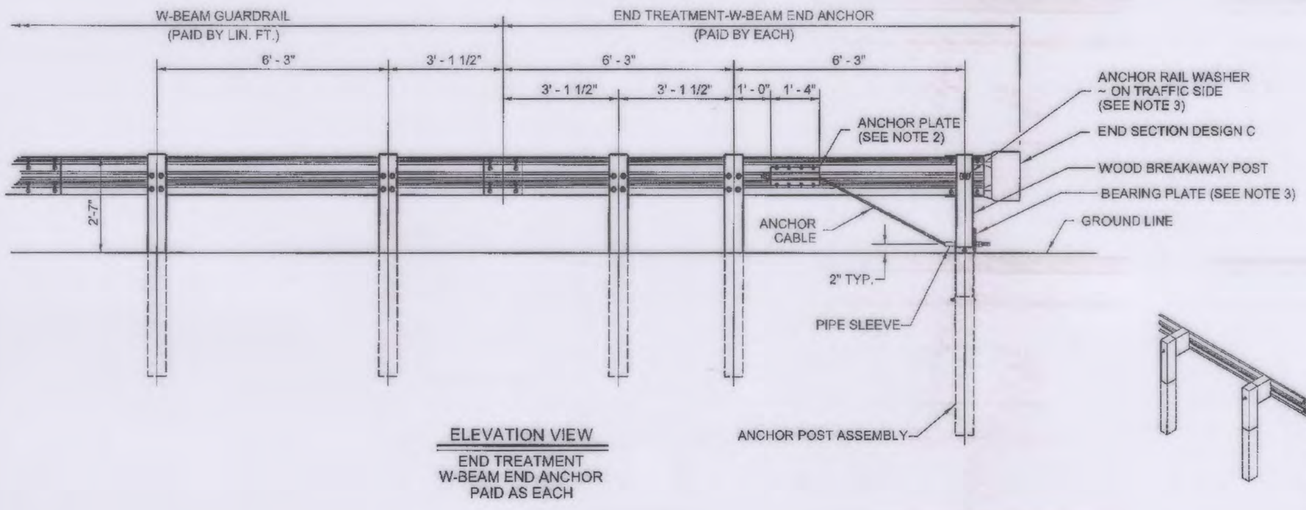

ELEVATION VIEW

END TREATMENT
W-BEAM END ANCHOR
PAID AS EACH

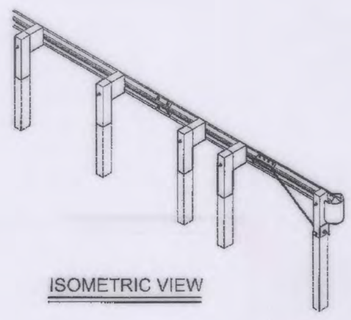

ISOMETRIC VIEW

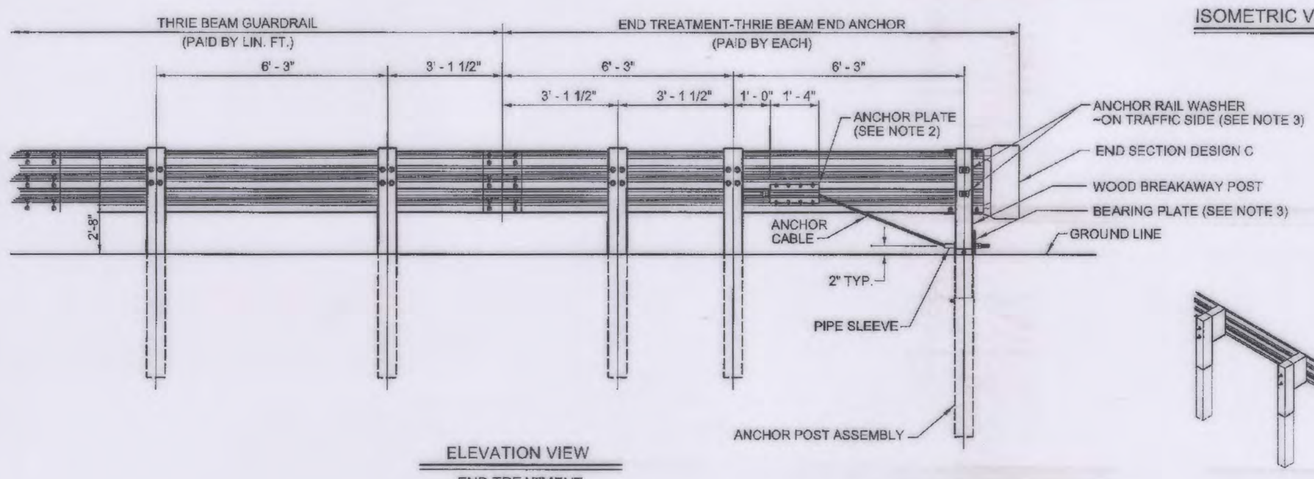

ELEVATION VIEW

END TREATMENT
THRIE BEAM END ANCHOR
PAID AS EACH

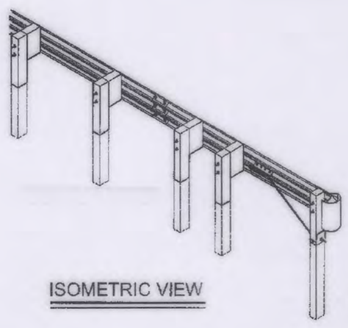

ISOMETRIC VIEW

NOTES:

1. FOR USE ON THE DOWNSTREAM END OF GUARDRAIL RUNS, WHEN A CRASHWORTHY TL-3 OR TL-2 END TERMINAL IS NOT REQUIRED.
2. ACCEPTED SYSTEMS ON THE DEPARTMENT'S APPROVED PRODUCTS LIST SHALL BE INSTALLED ACCORDING TO MANUFACTURERS' INSTALLATION INSTRUCTIONS.
3. SHOP DRAWINGS AND MANUFACTURER'S INSTALLATION INSTRUCTIONS SHALL BE SUBMITTED BY THE CONTRACTOR TO THE PROJECT ENGINEER A MINIMUM OF FIVE DAYS PRIOR TO INSTALLATION.
4. FOR ADDITIONAL DETAILS NOT SHOWN, SEE SHEET 606-GR31-11/20 AND SHEET 606-GR31-12/20.

AFSHIN JIAN NEW MEXICO 16226 5-6-14 LICENSED PROFESSIONAL ENGINEER

NO.	DATE	REV. BY	DESCRIPTION

REVISIONS (OR CHANGE NOTICES)

NEW MEXICO
DEPARTMENT OF TRANSPORTATION
STANDARD DRAWING

END TREATMENT
W-BEAM END ANCHOR
& THRIE BEAM END ANCHOR

APPROVED _____ DESIGN ENGINEER _____ DATE

DRAWING SCALE = NOT TO SCALE

606-GR31-9/20

edd_trf\preliminary drawings & docs\roadside\Working Folder~GR Type 31 Standards\GR31-9 Beam Guardrail end Anchor End Terminal Types 3 & 4.dgn

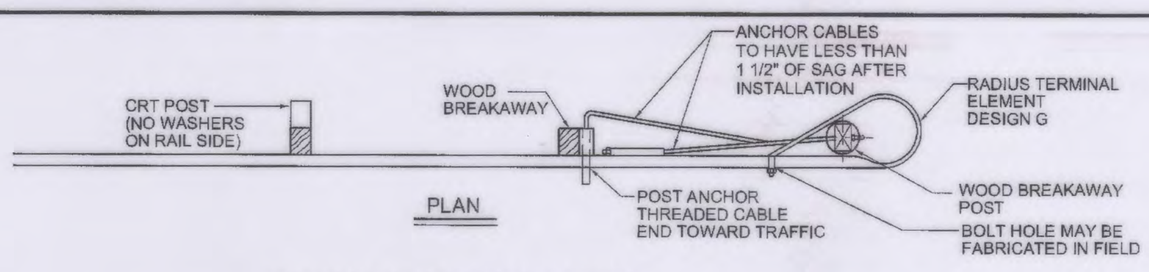

PLAN

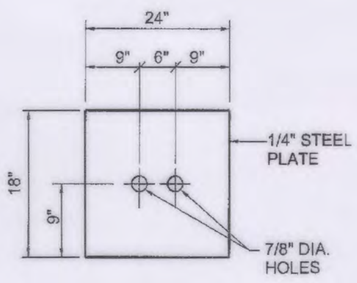

SOIL PLATE DETAIL

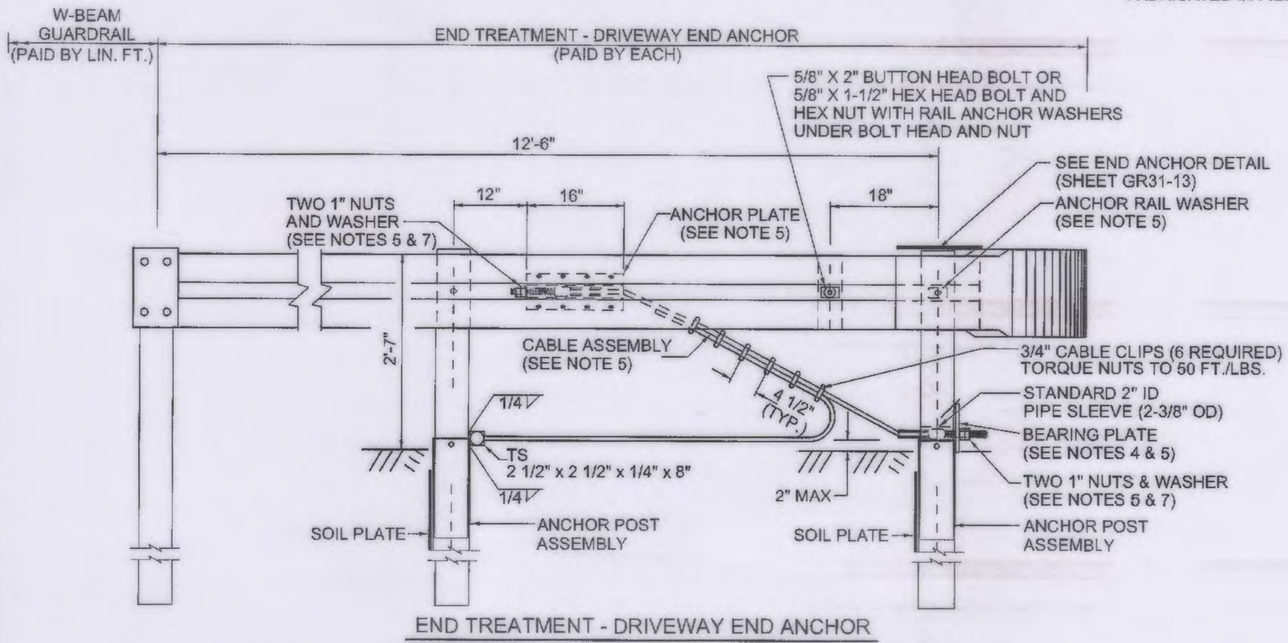

END TREATMENT - DRIVEWAY END ANCHOR

NOTES:

1. END TREATMENT SHOWN IS A GENERAL DEPICTION OF A NMDOT ACCEPTED END ANCHOR THAT IS FHWA SPECIFIED (SEE FHWA TECHNICAL ADVISORY T5040-320 ON THE FHWA WEBSITE FOR DETAILS). DRIVEWAY END ANCHORS SHOULD ONLY BE USED WHEN THERE IS INSUFFICENT SPACE TO PROPERLY INSTALL A TL-2 END TERMINAL (SHEET 606-GR31-8/20) OR A STANDARD END ANCHOR (SHEET 606-GR31-9/20) ON THE MINOR APPROACH OR DRIVEWAY. THIS END TREATMENT SHALL NOT BE USED ON THE MAINLINE.
2. FOR CURVED GUARDRAIL DETAILS SEE POST ANCHOR DETAILS ON SHEET 606-G31-14/20.
3. FOR CONTROLLED RELEASE TERMINAL (CRT) POST DETAIL, SEE SHEET 606-G31-14/20.
4. TACK WELD OR TOENAIL BEARING PLATE WITH 10D NAIL AT CORNERS TO PREVENT TURNING. BEND THE NAIL OVER THE BEARING PLATE.
5. FOR DETAILS NOT SHOWN SEE END ANCHORAGE DETAIL ON SHEET 606-GR31-13/20.
6. THE WOOD BREAKAWAY POSTS SHALL BE S4S TIMBER WITH A STRESS GRADE MARKED OR CERTIFIED BY A RECOGNIZED ASSOCIATION OR AGENCY WHICH IS CERTIFIED BY THE BOARD OF REVIEW. AMERICAN LUMBER STANDARDS COMMITTEE TO GRADE THE SPECIES. WOOD PRESERVATIVES SHALL CONFORM TO THE REQUIREMENTS OF AASHTO DESIGNATION M133.
7. OUTSIDE NUT WILL BE TORQUED AGAINST INSIDE NUT A MINIMUM OF 100 FT./LBS.

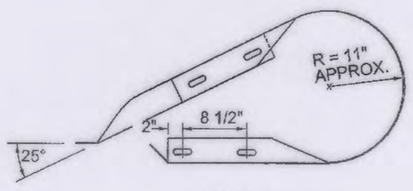

PLAN

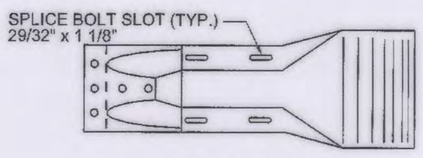

ELEVATION

RADIUS TERMINAL ELEMENT
DESIGN G

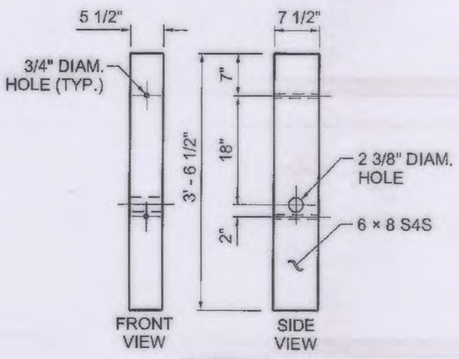

W-BEAM
WOOD BREAKAWAY POST
SEE NOTE 5

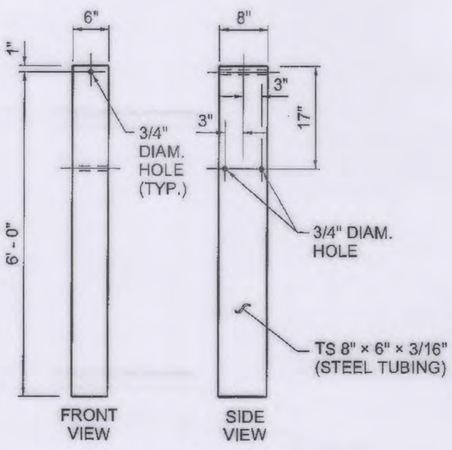

FOUNDATION TUBE

AFSHIN JIAN NEW MEXICO 16226 5-6-14 LICENSED PROFESSIONAL ENGINEER

NO.	DATE	REV. BY	DESCRIPTION

REVISIONS (OR CHANGE NOTICES)

NEW MEXICO
DEPARTMENT OF TRANSPORTATION
STANDARD DRAWING

END TREATMENT
DRIVEWAY END ANCHOR

APPROVED _____ DESIGN ENGINEER _____ DATE

DRAWING SCALE = NOT TO SCALE

606-GR31-10/20

edd_trf\preliminary drawings & docs\roadside\Working Folder~GR Type 31 Standards\ G31-10 Beam Guardrail End Anchor End Terminal Type 5.dgn

SHEET NO: 12-12

SHEET TITLE: NMDOT STANDARD DETAILS

DATE: JAN 2015
CHECKED BY: CAP
DRAWN BY: JEM
DESIGNED BY: JEL
PROJECT NO: 116002300

REV.	DATE	DESCRIPTION	BY

PROJECT NAME

CITY OF BELEN
CAMINO DEL LLANO PONDS

NMDOT

CITY OF BELEN THE HUB CITY STATE OF NEW MEXICO

WILSON & COMPANY
4900 LANG AVE. NE
ALBUQUERQUE, NM 87109
PHONE: 505-348-4000
FAX: 505-348-4055 FIRST FLOOR
FAX: 505-348-4155 SECOND FLOOR
www.wilsonco.com

M:\JFS\11-600-023-00\CADD\SHEETS\05 DETAILS\NMDOT\116023_NMDOT 01.DWG 11/12/2014 9:12 AM

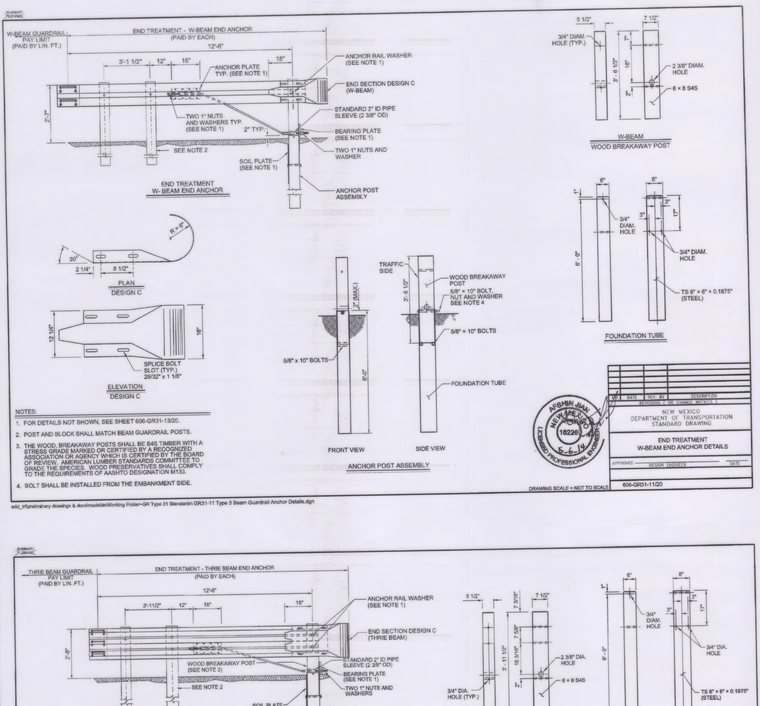

edd_sfpprelimiary drawings & dcn/modeldir/Working Folder~GR Type 31 Standardn GR31-11 Type 3 Beam Guardrail Anchor Details.dgn

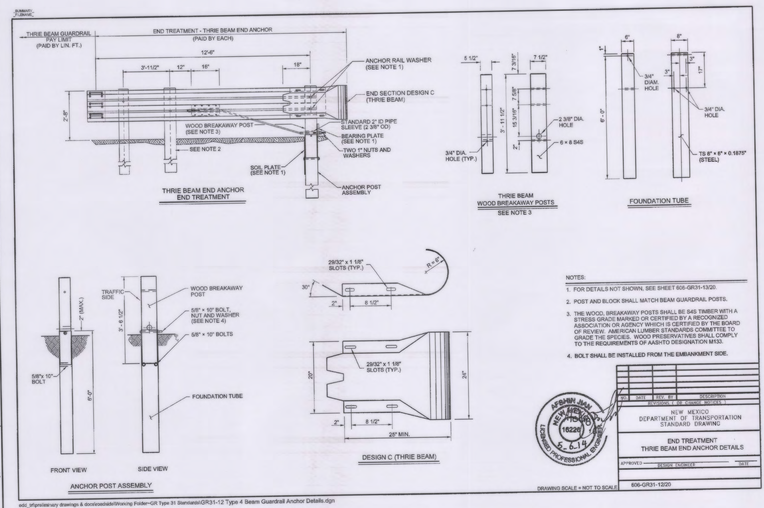

edd_sfpprelimiary drawings & dcn/modeldir/Working Folder~GR Type 31 Standardn GR31-12 Type 4 Beam Guardrail Anchor Details.dgn

SHEET NO.	SHEET TITLE	DATE	DESIGNED BY	CHECKED BY	DRAWN BY	PROJECT NO.
12-13	NMDOT STANDARD DETAILS	JAN 2015	JEM	CAP	CAP	116023-00

REV.	DATE	DESCRIPTION	BY

PROJECT NAME: CITY OF BELEN CAMINO DEL LLANO PONDS

NMDOT

WILSON & COMPANY
4900 LANG AVE. NE
ALBUQUERQUE, NM 87109
PHONE: 505-348-4000
FAX: 505-348-4005 FIRST FLOOR
FAX: 505-348-4155 SECOND FLOOR
www.wilsonco.com

M:\JFS\11-600-023-00\CADD\SHEETS\05 DETAILS\NMDOT\116023_NMDOT 01.DWG 11/12/2014 9:12 AM

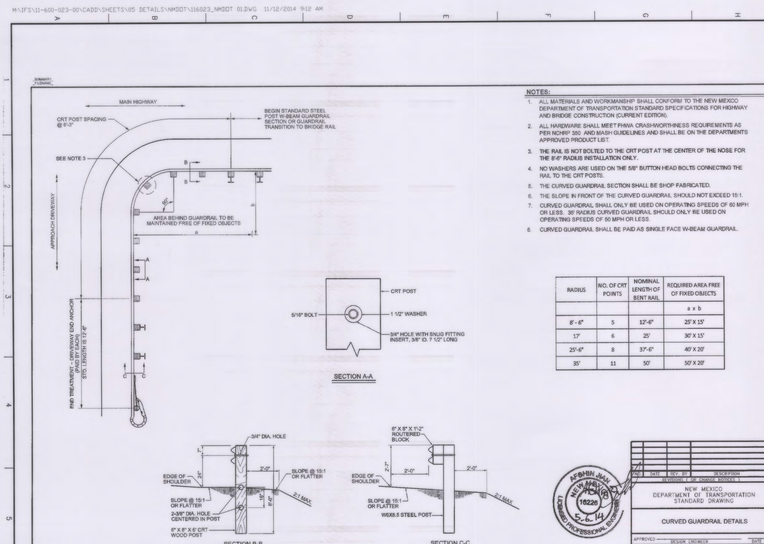

RADIUS	NO. OF CRT POINTS	NOMINAL LENGTH OF BENT RAIL	REQUIRED AREA FREE OF FIXED OBJECTS
			a x b
8'- 6"	5	12'-6"	25' X 15'
13'	6	25'	30' X 15'
25'-6"	8	37'-6"	40' X 20'
35'	11	50'	50' X 20'

edd_sfpprelimiary drawings & dcn/modeldir/Working Folder~GR Type 31 Standardn GR31-14_Curved Guardrail Details.dgn

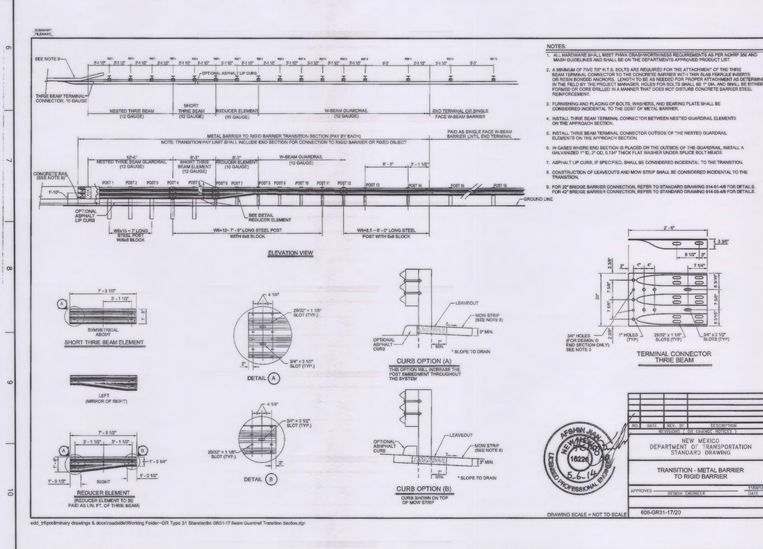

edd_sfpprelimiary drawings & dcn/modeldir/Working Folder~GR Type 31 Standardn GR31-17 Beam Guardrail Transition Section.dgn

SHEET NO.	SHEET TITLE	DATE	DESIGNED BY	CHECKED BY	DRAWN BY	PROJECT NO.
12-14	NMDOT STANDARD DETAILS	JAN 2015	JEM	CAP	CAP	116023-00

REV.	DATE	DESCRIPTION	BY

PROJECT NAME: CITY OF BELEN CAMINO DEL LLANO PONDS

NMDOT

WILSON & COMPANY
4900 LANG AVE. NE
ALBUQUERQUE, NM 87109
PHONE: 505-348-4000
FAX: 505-348-4005 FIRST FLOOR
FAX: 505-348-4155 SECOND FLOOR
www.wilsonco.com

SUMMARY
FILENAME

NOTES:

1. IN CASES WHERE DESIGN F END SECTION IS LAPPED ON THE OUTSIDE OF THE GUARDRAIL, A GALVANIZED 1" ID, 2" OD, 0.134" THICK, NARROW TYPE A PLAIN WASHER OR AN ANCHOR RAIL WASHER WILL BE PLACED UNDER THE SPLICE BOLT HEADS.
2. ATTACH GUARDRAIL TO BRIDGE RAIL OR CONCRETE BARRIER WITH 7/8" DIAMETER BOLTS (FIVE MINIMUM) WITH THIN SLAB FERRULE INSERTS OR RESIN BONDED ANCHORS. SEE THE CONTRACT PLANS.

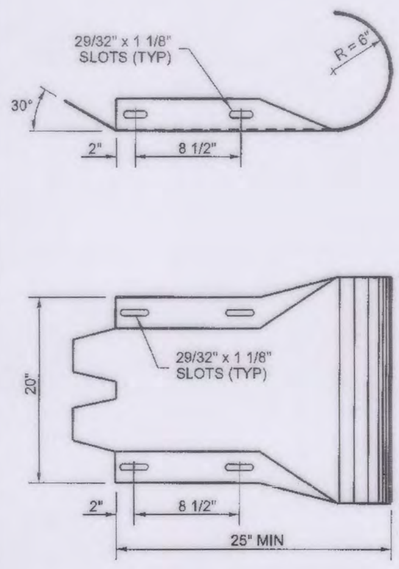

DESIGN C (THRIE BEAM)

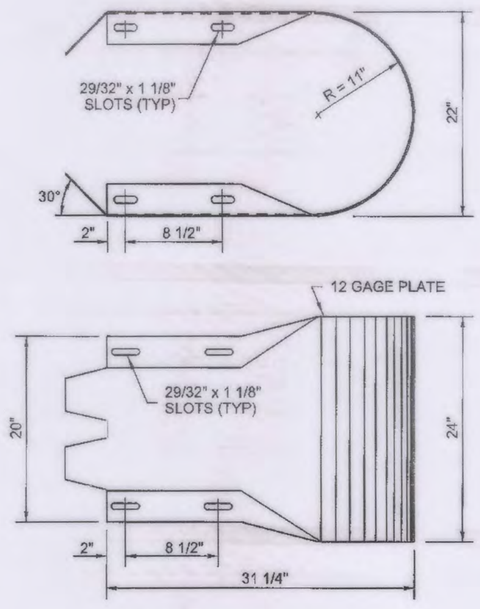

DESIGN D (THRIE BEAM)

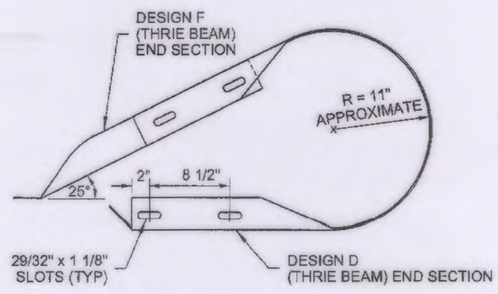

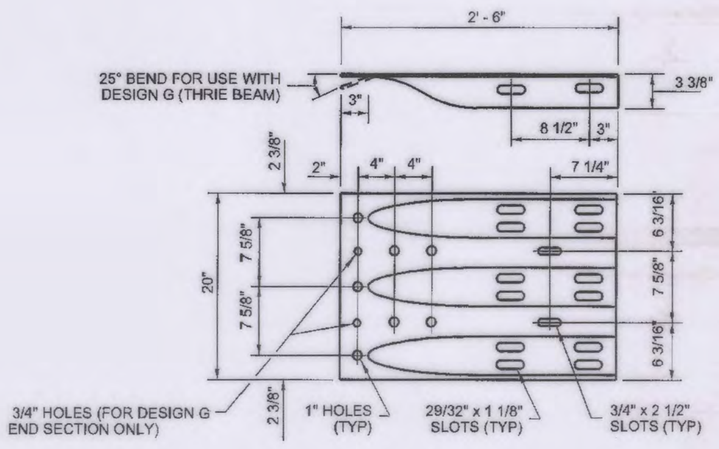

DESIGN F (THRIE BEAM)

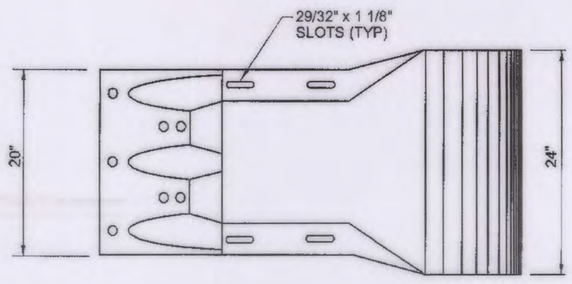

DESIGN G (THRIE BEAM)

NO.	DATE	REV. BY	DESCRIPTION

REVISIONS (OR CHANGE NOTICES)

NEW MEXICO
DEPARTMENT OF TRANSPORTATION
STANDARD DRAWING

THRIE BEAM GUARDRAIL
END SECTIONS

APPROVED _____ DESIGN ENGINEER _____ DATE

DRAWING SCALE = NOT TO SCALE

606-GR31-19/20

edd_tr\preliminary drawings & docs\roadside\Working Folder~GR Type 31 Standards\GR31-19 Thrie Beam End Sections.dgn

SUMMARY
FILENAME

NOTES:

1. END SECTION DESIGN C SHALL BE USED EXCEPT WHERE NOTED ON THE PLANS OR CONTRACT.
2. ATTACH GUARDRAIL TO BRIDGE RAIL OR CONCRETE BARRIER WITH 7/8" DIAMETER BOLTS (FIVE MINIMUM) WITH THIN SLAB FERRULE INSERTS OR RESIN BONDED ANCHORS. SEE THE CONTRACT PLANS.
3. A SINGLE PIECE HAVING SIMILAR DIMENSIONAL SHAPE TO DESIGN G AND MATING WITH THE W-BEAM GUARDRAIL IS AN ACCEPTABLE ALTERNATE.
4. IN CASES WHERE DESIGN "F" END SECTION IS LAPPED ON THE OUTSIDE OF THE GUARDRAIL, A GALVANIZED 1" ID, 2" OD, 0.134" THICK, NARROW TYPE A PLAIN WASHER OR AN ANCHOR RAIL WASHER SHALL BE PLACED UNDER THE SPLICE BOLT HEADS.

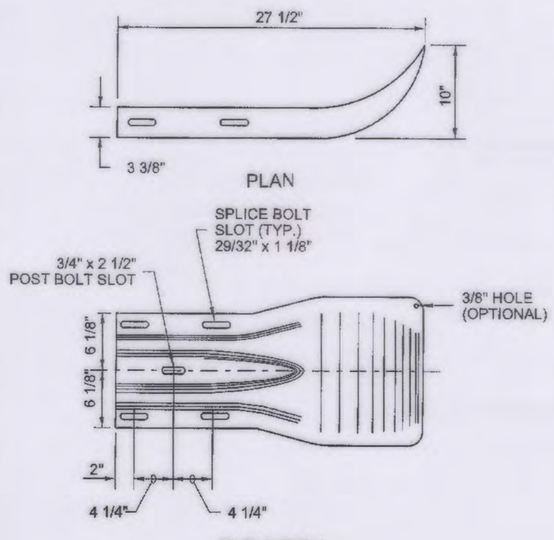

DESIGN A

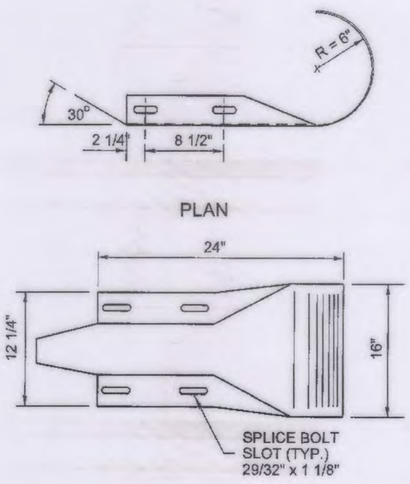

DESIGN C

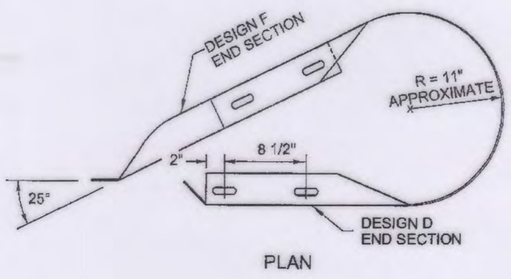

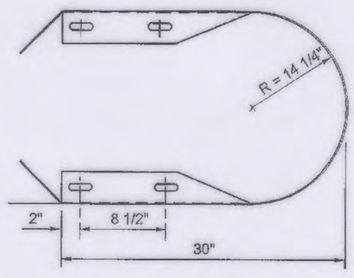

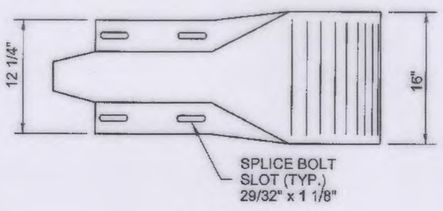

DESIGN D

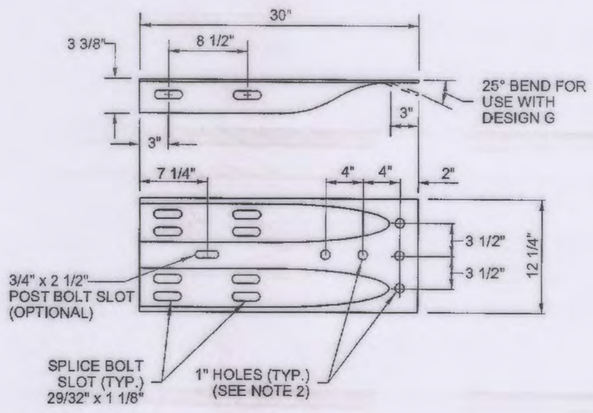

DESIGN F
(SEE NOTE 4)

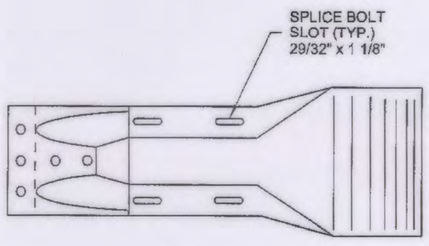

DESIGN G
(SEE NOTE 3)

NO.	DATE	REV. BY	DESCRIPTION

REVISIONS (OR CHANGE NOTICES)

NEW MEXICO
DEPARTMENT OF TRANSPORTATION
STANDARD DRAWING

W-BEAM GUARDRAIL
END SECTIONS

APPROVED _____ DESIGN ENGINEER _____ DATE

DRAWING SCALE = NOT TO SCALE

606-GR31-20/20

edd_tr\preliminary drawings & docs\roadside\Working Folder~GR Type 31 Standards\ GR-20 Beam Guardrail End Sections.dgn

SHEET NO: 12-15

SHEET TITLE: NMDOT STANDARD DETAILS

DATE: JAN 2015
CHECKED BY: CAP
DRAWN BY: JEM
DESIGNED BY: JEL
PROJECT NO: 116002300

REV.	DATE	DESCRIPTION	BY

PROJECT NAME

CITY OF BELEN
CAMINO DEL LLANO PONDS

NMDOT

CITY OF BELEN THE HUB CITY STATE OF NEW MEXICO

WILSON & COMPANY
4900 LANG AVE. NE
ALBUQUERQUE, NM 87109
PHONE: 505-348-4000
FAX: 505-348-4055 FIRST FLOOR
FAX: 505-348-4155 SECOND FLOOR
www.wilsonco.com

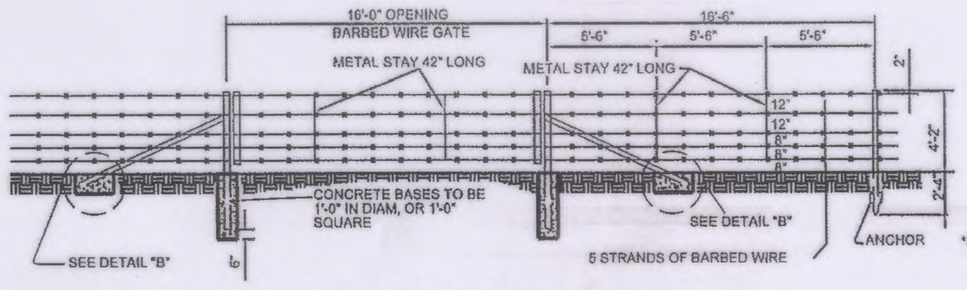

BARBED WIRE FENCE WITH METAL POSTS

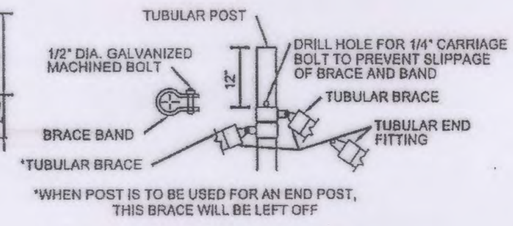

TUBULAR POST FITTINGS FOR END, CORNER OR LINE BRACE POSTS

GENERAL NOTES

1. DRAWINGS APPLY TO EITHER STRUCTURAL ANGLES OR TUBULAR POSTS.
2. SEE TABLE FOR METAL TUBULAR POST DIMENSIONS.

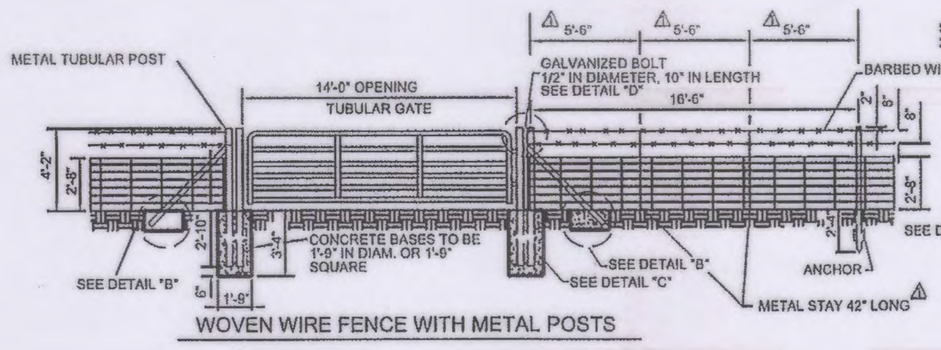

WOVEN WIRE FENCE WITH METAL POSTS

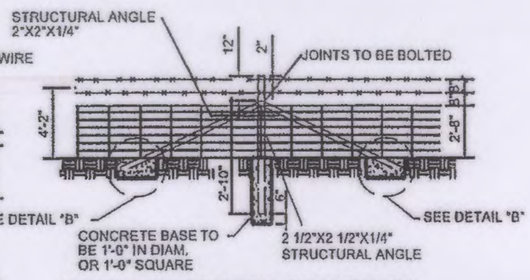

INTERMEDIATE METAL POST BRACE

TABLE FOR METAL TUBULAR POSTS

TYPE	O.D. INCHES	WT.LBS/LIN.FT.
BRACE POSTS	1.66	2.27
INTERMEDIATE POSTS	2.875	5.79
CORNER POSTS	4.00	9.11
GATE POSTS, UP TO 18 FEET	4.00	9.11

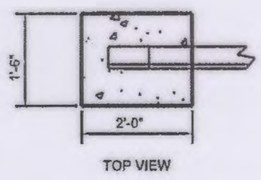

TOP VIEW

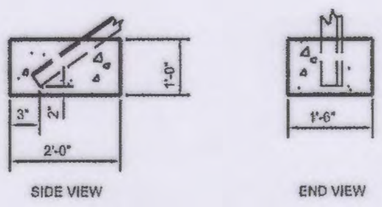

SIDE VIEW END VIEW

DETAIL "B"
ANCHOR DETAIL OF DIAGONAL METAL POST MEMBER

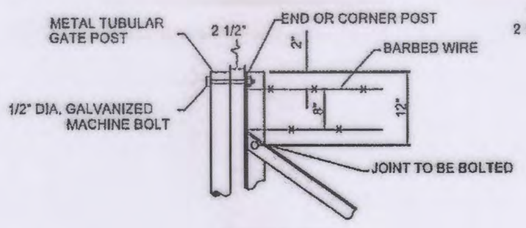

DETAIL "D"

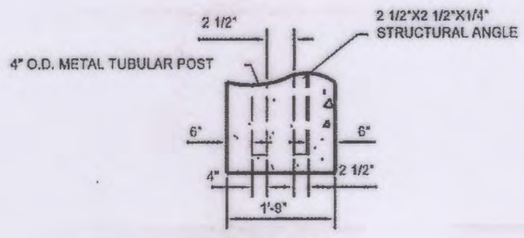

DETAIL "C"

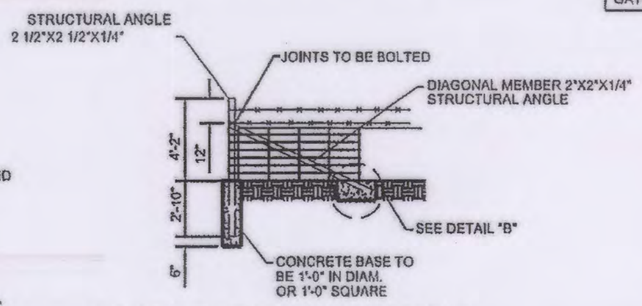

CORNER OR END METAL POST BRACE

NO.	DATE	REV. BY	DESCRIPTION
1	08-16-13	M. FAHEY	ADD METAL STAYS @ W.W. FENCE

REVISIONS (OR CHANGE NOTICES)

NEW MEXICO
DEPARTMENT OF TRANSPORTATION
STANDARD DRAWING

BARBED WIRE AND WOVEN WIRE FENCE PLACEMENT

APPROVED DESIGN ENGINEER 8/16/13 DATE

DESIGNED BY ___ DRAWN BY ___ CHECKED BY ___

607-01-1/4 SHEET 1 OF 4

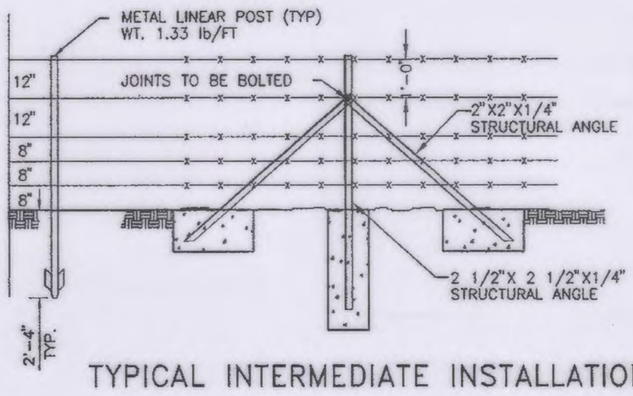

TYPICAL INTERMEDIATE INSTALLATION

BRACE ATTACHMENT DETAIL

TOP VIEW

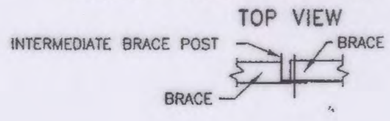

FRONT ELEVATION

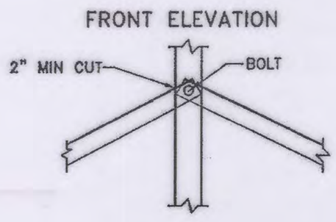

ALTERNATE
BRACE ATTACHMENT DETAIL

TOP VIEW

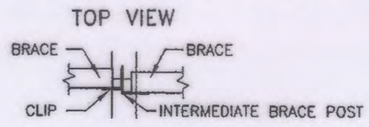

FRONT ELEVATION

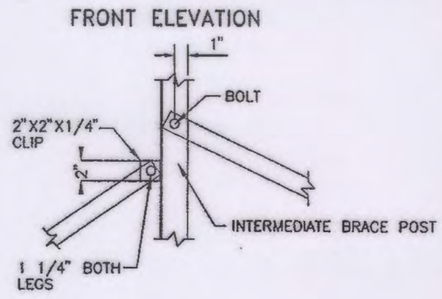

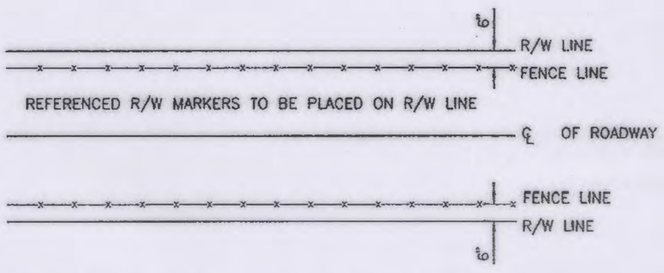

TYPICAL PLAN VIEW ILLUSTRATING METHOD OF PLACING FENCE

TOP VIEW

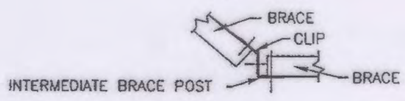

CLIP FOR ANGLE POINT

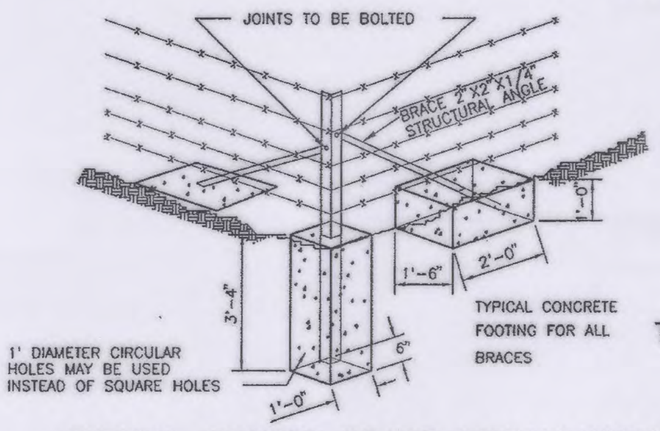

TYPICAL CORNER BRACE INSTALLATION

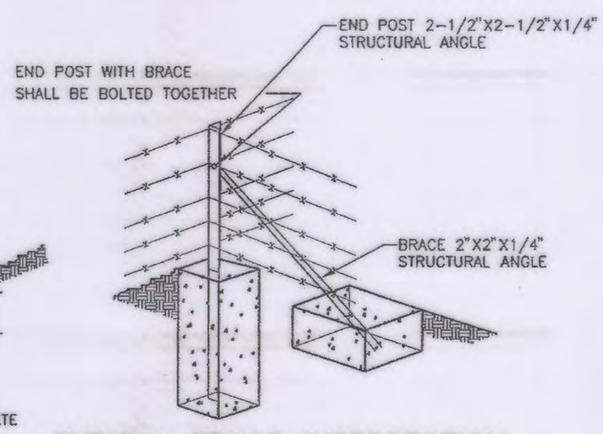

TYPICAL FENCE INTERSECTION INSTALLATION

NO.	DATE	REV. BY	DESCRIPTION

REVISIONS (OR CHANGE NOTICES)

NEW MEXICO
DEPARTMENT OF TRANSPORTATION
STANDARD DRAWING

BARBED WIRE AND WOVEN WIRE FENCE PLACEMENT

APPROVED DESIGN ENGINEER 11/29/04 DATE

DESIGNED BY___ DRAWN BY ___ CHECKED BY ___

607-01-2/4 SHEET 2 OF 4

SHEET NO: 12-16

SHEET TITLE: NMDOT STANDARD DETAILS

DATE: JAN 2015
CHECKED BY: CAP
DRAWN BY: JEM
DESIGNED BY: JEL
PROJECT NO: 116002300

REV.	DATE	DESCRIPTION	BY

PROJECT NAME

CITY OF BELEN
CAMINO DEL LLANO PONDS

NMDOT

CITY OF BELEN THE HUB CITY STATE OF NEW MEXICO

WILSON & COMPANY
4900 LANG AVE. NE
ALBUQUERQUE, NM 87109
PHONE: 505-348-4000
FAX: 505-348-4055 FIRST FLOOR
FAX: 505-348-4155 SECOND FLOOR
www.wilsonco.com

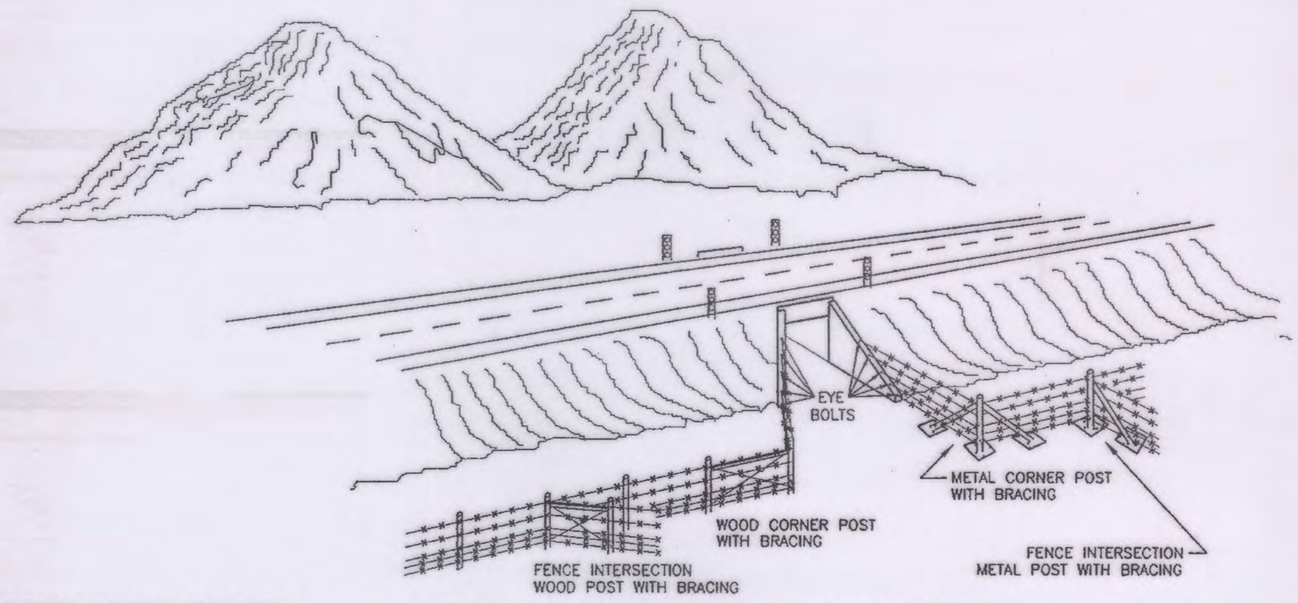

FENCE CONSTRUCTION AT STRUCTURE

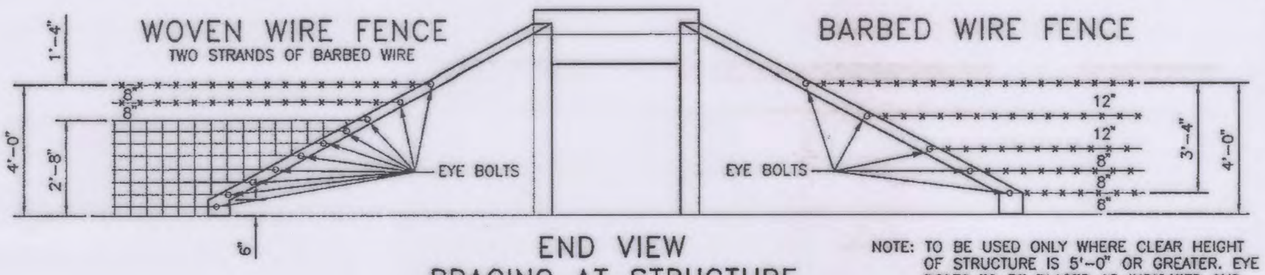

END VIEW
BRACING AT STRUCTURE

NOTE: TO BE USED ONLY WHERE CLEAR HEIGHT OF STRUCTURE IS 5'-0" OR GREATER. EYE BOLTS TO BE PLACED AS INDICATED AND SHALL ALSO BE USED TO TIE WING FENCES TO CONCRETE BLANKETS.

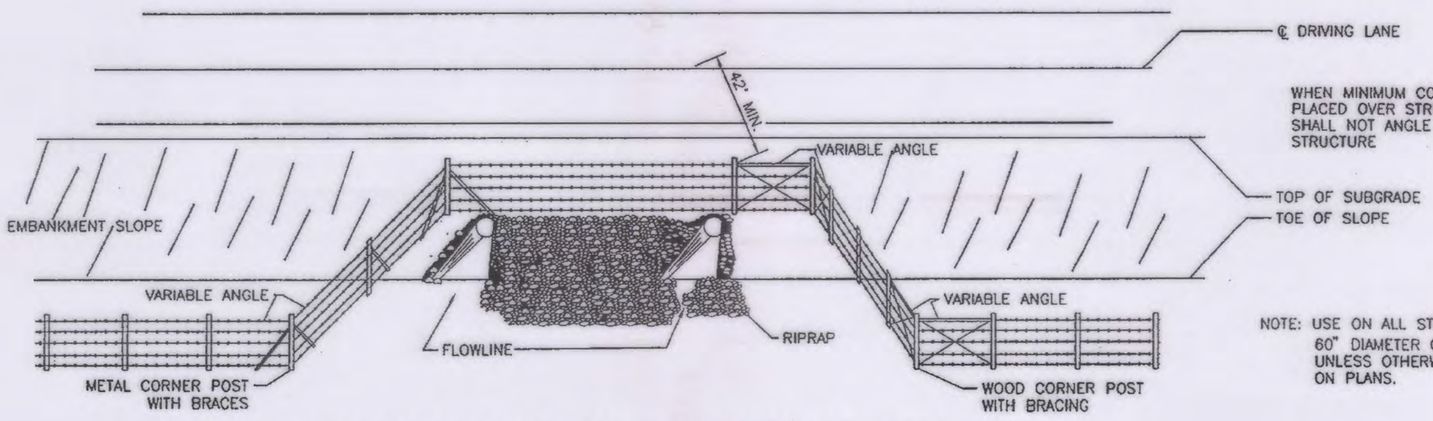

WHEN MINIMUM COVER IS TO BE PLACED OVER STRUCTURE, FENCING SHALL NOT ANGLE TO AND OVER STRUCTURE

NOTE: USE ON ALL STRUCTURES OF 60" DIAMETER OR OVER UNLESS OTHERWISE NOTED ON PLANS.

TYPICAL INSTALLATION OF FENCING OVER STRUCTURES

NO.	DATE	REV. BY	DESCRIPTION

REVISIONS (OR CHANGE NOTICES)

NEW MEXICO
DEPARTMENT OF TRANSPORTATION
STANDARD DRAWING

BARBED WIRE AND WOVEN WIRE FENCE PLACEMENT

APPROVED DESIGN ENGINEER 11/29/04 DATE

DESIGNED BY___ DRAWN BY ___ CHECKED BY ___

607-01-3/4 SHEET 3 OF 4

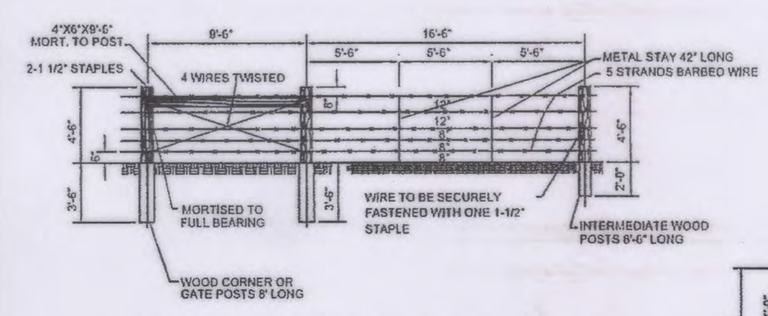

BARBED WIRE FENCE WITH WOOD POSTS

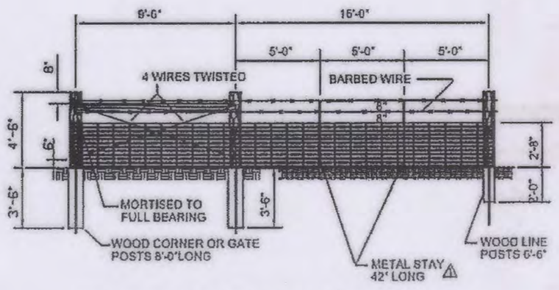

WOVEN WIRE FENCE WITH WOOD POSTS

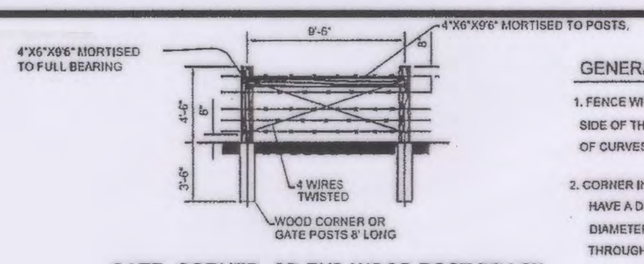

GATE, CORNER, OR END WOOD POST BRACE

GENERAL NOTES

1. FENCE WIRE SHALL BE PLACED ON THE FIELD SIDE OF THE POSTS EXCEPT ON THE INSIDE OF CURVES.
2. CORNER INTERMEDIATE AND GATE BRACE POSTS SHALL HAVE A DIAMETER OF 6". LINE POSTS SHALL HAVE A DIAMETER OF 3". ALL POSTS SHALL BE OF THE SAME TYPE THROUGHOUT THE PROJECT.

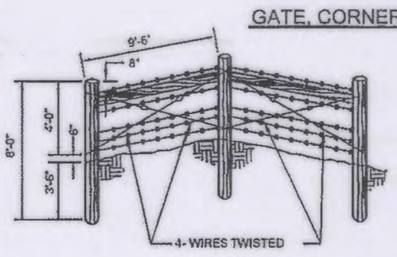

JOG BRACE

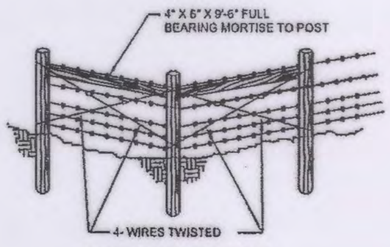

CORNER BRACE

PERSPECTIVE VIEW OF CORNER, JOG, AND CROSS FENCE BRACING TO BE USED FOR BARBED AND WOVEN WIRE FENCE

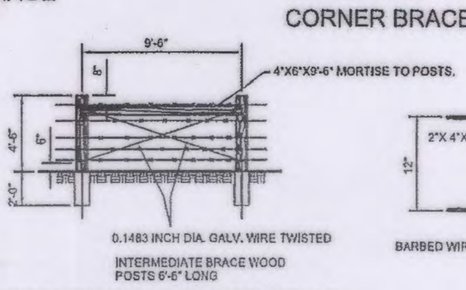

INTERMEDIATE WOOD POST BRACE

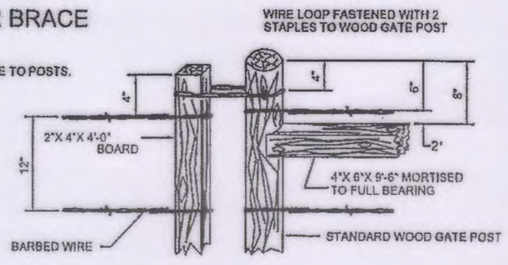

DETAIL OF WOOD GATE CATCH

PERSPECTIVE VIEW END AND WING BRACING TO BE USED FOR BARBED AND WOVEN WIRE FENCE

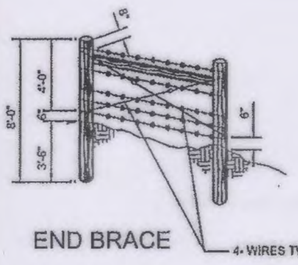

END BRACE

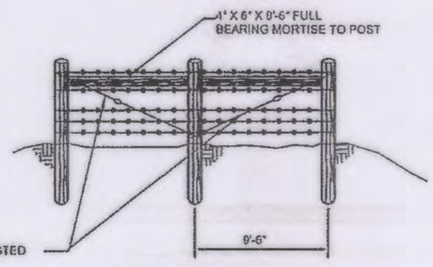

WING BRACE

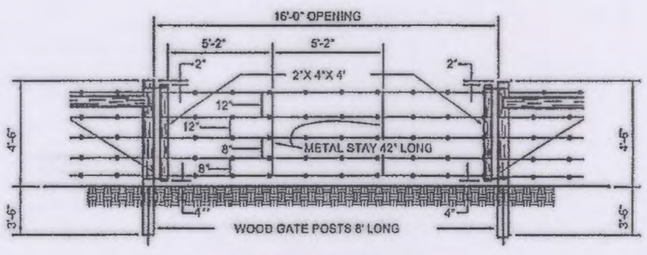

BARBED WIRE GATE

NO.	DATE	REV. BY	DESCRIPTION
1	09-18-13	M. FAHEY	ADD METAL STAYS @ W.W. FENCE

REVISIONS (OR CHANGE NOTICES)

NEW MEXICO
DEPARTMENT OF TRANSPORTATION
STANDARD DRAWING

BARBED WIRE AND WOVEN WIRE FENCE PLACEMENT

APPROVED DESIGN ENGINEER DATE

DESIGNED BY___ DRAWN BY___ CHECKED BY___

607-01-4/4 SHEET 4 OF 4

SHEET NO: 12-17

SHEET TITLE: NMDOT STANDARD DETAILS

DATE: JAN 2015
CHECKED BY: CAP
DRAWN BY: JEM
DESIGNED BY: JEL
PROJECT NO: 116000230

REV.	DATE	DESCRIPTION	BY

PROJECT NAME

CITY OF BELEN
CAMINO DEL LLANO PONDS

NMDOT

CITY OF BELEN THE HUB CITY STATE OF NEW MEXICO

WILSON & COMPANY
4900 LANG AVE. NE
ALBUQUERQUE, NM 87109
PHONE: 505-348-4000
FAX: 505-348-4055 FIRST FLOOR
FAX: 505-348-4155 SECOND FLOOR
www.wilsonco.com